OPERATION AND MAINTENANCE MANUAL

NAV-402AP

MP MASTER
MA28818

NAV-402AP

MARKER, G/S, VOR, LOC, COMM, AND AUTO
PILOT RAMP AND BENCH TEST SET

OPERATION/MAINTENANCE MANUAL

10200 WEST YORK STREET/WICHITA, KANSAS 67215 U.S.A./(316) 522-4981 TWX 910-741-6952

1002-0972-700

NAV-402AP

MARKER, G/S, VOR, LOC, COMM, AND AUTO
PILOT RAMP AND BENCH TEST SET

OPERATION/MAINTENANCE MANUAL

10200 WEST YORK STREET/WICHITA, KANSAS 67215 U.S.A./(316) 522-4981 TWX 910-741-6952

1002-0972-700

PUBLISHED BY
IFR SYSTEMS, INC.
Wichita, Kansas

Copyright © 1988 by IFR SYSTEMS, INC.

All rights reserved. Printed in the United States of America. No part of this publication may be reproduced, stored in a retrieval system, or transmitted in any form or by any means, electronic, mechanical, photocopying, recording or otherwise without the prior permission of the publisher.

WARNING:

HIGH VOLTAGE EQUIPMENT

THIS EQUIPMENT CONTAINS CERTAIN CIRCUITS AND/OR COMPONENTS OF EXTREMELY HIGH VOLTAGE POTENTIALS, CAPABLE OF CAUSING SERIOUS BODILY INJURY OR DEATH. WHEN PERFORMING ANY OF THE PROCEDURES CONTAINED IN THIS MANUAL, HEED ALL APPLICABLE SAFETY PRECAUTIONS.

RESCUE OF SHOCK VICTIMS

1. DO NOT ATTEMPT TO PULL OR GRAB THE VICTIM
2. IF POSSIBLE, TURN OFF THE ELECTRICAL POWER.
3. IF YOU CANNOT TURN OFF ELECTRICAL POWER, PUSH, PULL OR LIFT THE VICTIM TO SAFETY USING A WOODEN POLE, A ROPE OR SOME OTHER DRY INSULATING MATERIAL.

FIRST AID

1. AS SOON AS VICTIM IS FREE OF CONTACT WITH SOURCE OF ELECTRICAL SHOCK, MOVE VICTIM A SHORT DISTANCE AWAY FROM SHOCK HAZARD.
2. SEND FOR DOCTOR AND/OR AMBULANCE.
3. KEEP VICTIM WARM, QUIET AND FLAT ON HIS/HER BACK.
4. IF BREATHING HAS STOPPED , ADMINISTER ARTIFICIAL RESUSCITATION. STOP ALL SERIOUS BLEEDING.

CAUTION

- INTEGRATED CIRCUITS AND SOLID STATE DEVICES SUCH AS MOS FET'S, ESPECIALLY CMOS TYPES, ARE SUSCEPTIBLE TO DAMAGE BY ELECTROSTATIC DISCHARGES RECEIVED FROM IMPROPER HANDLING, THE USE OF UNGROUNDED TOOLS, AND IMPROPER STORAGE AND PACKAGING. ANY MAINTENANCE TO THIS UNIT MUST BE PERFORMED WITH THE FOLLOWING PRECAUTIONS:

1. BEFORE USE IN A CIRCUIT, KEEP ALL LEADS SHORTED TOGETHER EITHER BY THE USE OF VENDOR-SUPPLIED SHORTING SPRINGS OR BY INSERTING LEADS INTO A CONDUCTIVE MATERIAL.

2. WHEN REMOVING DEVICES FROM THEIR CONTAINERS, GROUND THE HAND BEING USED WITH A CONDUCTIVE WRISTBAND.

3. TIPS OF SOLDERING IRONS AND/OR ANY TOOLS USED MUST BE GROUNDED.

4. DEVICES MUST NEVER BE INSERTED INTO NOR REMOVED FROM CIRCUITS WITH POWER ON.

5. PC BOARD, WHEN TAKEN OUT OF THE SET, MUST BE LAID ON A GROUNDED CONDUCTIVE MAT OR STORED IN A CONDUCTIVE STORAGE BAG.

NOTE

Remove any built-in power source, such as a battery, before laying PC Boards on conductive mat or storing in conductive bag.

6. PC BOARDS, IF BEING SHIPPED TO THE FACTORY FOR REPAIR, MUST BE PACKAGED IN A CONDUCTIVE BAG AND PLACED IN A WELL-CUSHIONED SHIPPING BOX.

CAUTION

- THE USE OF SIGNAL GENERATORS FOR MAINTENANCE AND OTHER ACTIVITIES CAN BE A SOURCE OF ELECTROMAGNETIC INTERFERENCE TO AVIATION RECEIVERS, WHICH CAN CAUSE DISRUPTION AND INTERFERENCE TO AERONAUTICAL SERVICE OUT TO A DISTANCE OF SEVERAL MILES.

- USERS OF THIS EQUIPMENT SHOULD SCRUTINIZE ANY OPERATION WHICH RESULTS IN RADIATION OF A SIGNAL (DIRECTLY OR INDIRECTLY) AND ENSURE COMPLIANCE WITH INSTRUCTIONS OUTLINED IN FAA CIRCULAR AC 170-6C, DATED FEBRUARY 19, 1981.

HOW TO USE
NAV-402AP OPERATION/MAINTENANCE MANUAL

The NAV-402AP Operation/Maintenance Manual is comprised of pages from the NAV-401L Operation/Maintenance Manual and pages exclusive to the NAV-402AP.

Pages from the NAV-401L Operation/Maintenance Manual are valid for the NAV-401L and NAV-402AP. Pages exclusive to the NAV-402AP are identified by the suffix "AP" in the page number (Example: 3-14AP).

LIST OF EFFECTIVE PAGES

The manual pages listed below which are affected by a current change or revision, are so identified by a revision number and an asterisk.

Date of issue for original and changed pages are:

Revision	1	.....	January 1980
Revision	2	.....	January 1981
Revision	3	.....	May 1982
Revision	4	.....	March 1985
Revision	5	.....	August 1985
Revision	6	.....	November 1985
Revision	7	.....	January 1987
Revision	8	.....	February 1988

TOTAL NUMBER OF PAGES IN THIS MANUAL IS 305 CONSISTING OF FOLLOWING:

Pg.	Rev.
Title Page	7
*Copyright Page ...	8
How To Use Page ..	7
Warning Page	7
Caution Page	7
*A	8
B	7
*C	8
D	7
iAP	7
iiAP Blank	7
o-iAP	1
o-iiAP	1
o-iiiAP	1
o-ivAP Blank	1
1-1AP	1
1-2AP Blank	1
1-3	1
1-4	1
1-5	1
1-6	1
1-7	1
1-8	1
1-9	5
1-10	1
1-11	3
1-12AP Blank	3
2-1	1

Pg.	Rev.
2-2	1
2-3	1
2-4 Blank	1
3-1 Blank	1
3-2	1
3-3	1
3-4 Blank	1
3-5	1
3-6	1
3-7	1
3-8	1
3-9	1
3-10	1
3-11	1
3-12AP	1
3-12A AP	1
3-12B AP Blank ...	1
3-13	1
*3-14	8
*3-15	8
*3-16	8
3-17	1
3-18	1
3-19	4
3-20AP	1
3-20A AP	3
3-20B AP	1
3-21	1

LIST OF EFFECTIVE PAGES

Pg.	Rev.
3-22	1
3-23	1
3-24	1
3-25	4
*3-26AP	8
3-27	1
3-28	1
3-29AP	1
3-30AP	1
3-30A AP	1
3-30B AP Blank	1
3-31	1
3-32	1
4-1	4
4-2AP	1
4-3	1
4-4	1
4-5AP	1
4-6	4
4-7	1
4-8	1
4-9	1
4-10 Blank	1
4-11AP	1
4-12	1
4-13	1
4-14	1
4-15	1
4-16	1
m-iAP	5
m-iiAP	5
m-iiiAP	5
m-ivAP Blank	5
5-1	1
5-2	1
5-3	1
5-4	1
5-5	1
5-6	1
5-7AP	1
5-8AP	1
5-9AP	1
5-10AP	2
5-10A AP	2
5-10B AP Blank	2
5-11	1

Pg.	Rev.
5-12	1
5-13	1
5-14 Blank	1
5-14A AP	2
5-14B AP Blank	2
5-15AP	1
5-16AP	1
5-17AP	1
5-18AP Blank	1
6-1	1
6-2	1
6-3	1
6-4	1
6-5	1
6-6	1
6-7	1
6-8	1
6-9AP	1
6-10	4
6-11AP	1
6-12	4
6-13	1
6-14	1
6-15	1
6-16	1
6-17	1
6-18	1
6-19	1
6-20	1
6-20A AP	3
6-20B AP	3
6-21AP	1
6-22AP	1
6-22A AP	1
6-22B AP Blank	1
6-23	1
6-24	1
6-25AP	1
6-26	4
6-27	1
6-28	1
6-29	4
6-30AP	1
6-30A AP	1
6-30B AP Blank	1
6-31	1

LIST OF EFFECTIVE PAGES

Pg.	Rev.
6-32	1
6-33	1
6-34	1
6-35	1
6-36	1
6-37	1
6-38	1
7-1	5
7-2	1
7-3	1
7-4 Blank	1
7-5	1
7-6	1
7-7	1
7-8 Blank	1
7-9AP	1
7-10AP Blank	1
s-iAP	2
s-iiAP	1
s-iiiAP	1
s-ivAP Blank	1
*8-1	8
*8-2	8
*8-3	8
*8-4 Blank	8
*8-5	8
*8-6 Blank	8
*8-7	8
*8-8 Blank	8
8-9	5
8-10 Blank	5
8-11	5
8-12 Blank	5
8-13	5
8-14 Blank	5
8-15	5
8-16 Blank	5
8-17	7
8-18 Blank	7
8-19	1
8-20 Blank	1
8-21	5
8-22 Blank	5
8-23	1
8-24 Blank	1
8-25	3
8-26 Blank	3
8-27	1
8-28 Blank	1
8-29	3
8-30 Blank	3
8-31	1
8-32 Blank	1
8-33	1
8-34 Blank	1
*8-35	8
*8-36 Blank	8
8-37	5
8-38 Blank	5
*8-39	8
*8-40 Blank	8
*8-41	8
*8-42 Blank	8
*8-43	8
*8-44 Blank	8
*8-45	8
*8-46 Blank	8
*8-47	8
*8-48 Blank	8
*8-49	8
*8-50 Blank	8
*8-51	8
*8-52 Blank	8
*8-53	8
*8-54 Blank	8
8-55	1
8-56 Blank	1
8-57	1
8-58 Blank	1
8-59	1
8-60 Blank	1
8-61AP	1
8-62AP Blank	3
8-63	1
8-64 Blank	1
8-65AP	2
8-66AP Blank	2
*8-67	8
*8-68 Blank	8
*8-69	8
*8-70 Blank	8
9-1	1

LIST OF EFFECTIVE PAGES

Pg.	Rev.
9-2 Blank	1
9-3AP	1
9-4AP	1
9-5AP	1
9-6AP Blank	1
9-7AP	1
9-8AP Blank	1
9-9AP	1
9-10AP Blank	1
9-11	1
9-12 Blank	1
9-13AP	1
9-14AP Blank	1
9-15	1
9-16 Blank	1
9-17	1
9-18	1
9-19	1
9-20	1
9-21	1
9-22 Blank	1
9-23	1
9-24	1
9-25	1
9-26 Blank	1
9-27	1
9-28 Blank	1
9-29	1
9-30	1
9-31	1
9-32 Blank	1
9-33	2
9-34AP	1
9-34-1AP	1
9-34-2AP Blank	1
9-35	1
9-36 Blank	1
9-37	1
9-38 Blank	1
9-39	1
9-40 Blank	1
9-41AP	1
9-42AP	1
9-43AP	1
9-44AP Blank	1
9-45AP	1
9-46AP	1
9-47	1
9-48 Blank	1
9-49	1
9-50 Blank	1
9-51	1
9-52 Blank	1
9-53AP	1
9-54AP Blank	1
9-55AP	1
9-56AP	1
10-1AP	1
10-2AP Blank	1
10-3AP	1
10-4AP Blank	1
10-5AP	1
10-6AP	1

TABLE OF CONTENTS
NAV-402AP

GENERAL

Title Page	
Copyright Page	
How To Use Page	
Warning Page	
Caution Page	
List Of Effective Pages	A

OPERATION

Table of Contents - Operation	o-i
List of Figures and Tables - Operation	o-iii
SECTION 1 General Description and Specifications	1-1
SECTION 2 Inspection and Installation	2-1
SECTION 3 Operation	3-1
SECTION 4 Theory of Operation	4-1

MAINTENANCE

Table of Contents - Maintenance	m-i
List of Figures and Tables - Maintenance	m-iii
SECTION 5 Performance Tests	5-1
SECTION 6 Calibration Procedures	6-1
SECTION 7 I.C. Guide	7-1

SCHEMATICS

Table of Contents - Section 8	s-i
Table of Contents - Section 9	s-ii
Table of Contents - Section 10	s-iii
SECTION 8 Schematics	8-1
SECTION 9 Parts List	9-1
SECTION 10 Mechanical	10-1

TABLE OF CONTENTS
NAV-402AP

OPERATION

Page

SECTION 1 General Description and Specifications.

1 Description. 1-1AP
2 Specifications 1-3
2-1 RF Output 1-3
2-2 MKR Signal. 1-3
2-3 VOR Signal. 1-4
2-4 LOC Signal. 1-4
2-5 G/S Signal. 1-5
2-6 COMM Signal 1-5
2-7 External Modulation 1-6
2-8 Distortion. 1-6
2-9 Counter Characteristics 1-7
2-10 Monitor Meter Characteristics 1-8
2-11 Bearing Monitor Circuit 1-8
2-12 Spectral Purity 1-9
2-13 Power 1-9
2-14 Physical Characteristics. 1-9
3 NAV-402AP Specifications 1-11AP
3-1 RF Output 1-11AP
3-2 LOC Signal (Primary or Auxiliary) 1-11AP

SECTION 2 Inspection and Installation.

1 Introduction 2-1
2 Grounding Requirements 2-1
3 Installation 2-1
4 Initial Inspection 2-1
5 Cleaning 2-2
6 Inspection Procedures. 2-2
7 Repacking for Shipping 2-3

SECTION 3 Operation.

1 Introduction 3-1
2 Signals Simulated. 3-1
3 General Usage of NAV-401L. 3-1
4 Ramp Operation 3-2
5 Bench Operation. 3-2
6 General Purpose Counter Operation. 3-2
7 Portable Operation 3-3

SECTION 4 Theory of Operation

1 Introduction 4-1
2 Marker Signal Generation 4-1
3 COMM Signal Generation 4-1
4 VOR Signal Generation. 4-2AP
5 Localizer and Glide Slope Signal Generation. 4-2AP
6 Bearing Generator. 4-3
7 RF Section 4-4
8 Counter Section. 4-6
9 Monitoring Section 4-7
10 Power Section. 4-7

LIST OF FIGURES AND TABLES
NAV-402AP

OPERATION

Page

SECTION 1 General Description and Specifications.

Fig. 1-1 Low Pass Filter. 1-6
Table 1-1 Input Power Versus Time Limits 1-8
Table 1-2 Tone Modulation Levels 1-10

SECTION 3 Operation.

Table 3-1 Correspondence Chart for Decibels, Volts and Watts (50 Ω load). 3-5
Table 3-2 Correspondence Charts for 90 Hz and 150 Hz Tones. 3-9
Table 3-3 150 Hz and 90 Hz Tones Variable Phase Relationships. 3-10
Fig. 3-1 NAV-401L Front and Rear Views. 3-11
Table 3-4 Controls, Indicators and Connectors. 3-12
Fig. 3-2AP Front Panel Controls, Indicators and Connectors 1-5 . . . . . 3-12AP
Fig. 3-3AP Front Panel Controls, Indicators and Connectors 5-9 . . . . . 3-14AP
Fig. 3-4 Front Panel Controls, Indicators and Connectors 10-13 3-16
Fig. 3-5 Front Panel Controls, Indicators and Connectors 13-19 3-18
Fig. 3-6AP Front Panel Controls, Indicators and Connectors 20-26 . . . . . 3-20AP
Fig. 3-7 Front Panel Controls, Indicators and Connectors 27-31 3-22
Fig. 3-8 Rear Panel Controls, Indicators and Connectors 3-24
Fig. 3-9AP Front Panel Controls, Indicators and Connectors (all) 3-26AP
Table 3-5 Typical Test Control Settings. 3-27

SECTION 4 Theory of Operation.

Fig. 4-1AP Simplified Overall Block Diagram 4-9AP
Fig. 4-2AP Simplified Tone Generator Block Diagram. 4-11AP
Fig. 4-3 Simplified Bearing Generator Block Diagram . . . 4-12
Fig. 4-4 Simplified RF Generator Block Diagram. 4-13
Fig. 4-5 Simplified Counter Block Diagram 4-14
Fig. 4-6 Simplified Monitoring Section Block Diagram. . . 4-15
Fig. 4-7 Simplified Power Section Block Diagram 4-16

GENERAL DESCRIPTION AND SPECIFICATIONS

NAV-402AP SECTION 1

1 Description.

1-1 The NAV-402AP is an FCC Type-Accepted bench and ramp test set designed to meet the electronic functional test requirements of Category I and Category II ILS Systems, Communication (COMM), Navigation (NAV), and Marker (MKR) Systems.

1-2 The NAV-402AP is housed in a compact, portable case. It includes a signal generator with a variable attenuator which can be connected to the equipment under test by a radiated signal from a self-contained antenna or by a coax line. It can be operated under either crystal frequency control or in variable frequency mode in each band.

1-3 The NAV-402AP generator can be modulated internally by a 1020 Hz Ident tone, Marker, VHF Omnidirectional Range (VOR), Localizer (LOC) or Glide Slope (G/S) tones, or by an external signal.

1-4 The NAV-402AP includes a six-digit counter which indicates the RF frequency of the signal generator on any band, the frequency of a COMM transmitter under test, any external signal input from 1 MHz to at least 300 MHz, or the VOR bearing selected by Bearing Select Switches.

1-5 An RF power meter is built-in to measure COMM transmitter power from 0-10W or 0-100W either peak or average power by selecting a switch position located on the Front Panel. A COMM transmitter demodulation output permits viewing or listening to COMM modulation.

1-6 A built-in Modulation Meter measures Signal Generator Percent of Modulation on any frequency band from 0-30% or 0-100%. Front Panel controls permit quick setting of modulation percentages.

1-7 A 90^0 bearing check monitor allows quick verification of basic VOR bearing from the VOR demod signal.

1-8 A nickel-cadmium battery and built-in charging system permit completely portable operation for up to 2 hours continuous duty with the counter off, one hour continuous duty with the counter on. Any time the set is plugged to an AC line, the battery is being charged. In battery operation, an automatic timer turns the set off after 6 to 10 minutes. The set can be recycled by pressing power switch to BAT position

1-9 The NAV-402AP contains features to allow testing of sophisticated autopilot systems. These features include: automatic LOC DDM automatic sweep, two crystal controlled VOR frequencies; and two crystal controlled, paired LOC and G/S frequencies.

2 Specifications.

2-1 RF OUTPUT

Power:	Continuously variable from -7 dBm to -110 dBm (0.1 V to 0.709 µV)
Accuracy:	±2 dB from -30 dBm to -110 dBm (See enclosed -7 to -30 dBm Attenuator Correction Chart)
Frequency Range:	MKR. . . 72 MHz to 78 MHz VOR/LOC. 107 MHz to 120 MHz COMM LO: 118 MHz to 136 MHz HI: 134 MHz to 156 MHz G/S. . . 327 MHz to 337 MHz
Standard Crystal Frequencies:	MKR XTL . . . 75.000 MHz VOR XTL . . . 108.000 MHz LOC XTL . . . 108.100 MHz G/S XTL . . . 334.700 MHz COMM XTL. . . 126.900 MHz NOTE Any channel frequency crystal may be custom installed in any of the bands.
RF Frequency Accuracy:	Variable Frequency Mode with Digital Display indication: . . . . . 0.002% Phase Lock Operation: 25 kHz increments in MKR, LOC, VOR, and COMM bands: 50 kHz increments in G/S band: . . . . . 0.002% Crystal Control Mode: 0.005%

2-2 MKR SIGNAL

Tones:	1020 Hz (±1%) Ident 400 Hz (±1%) 1300 Hz (±1%) 3000 Hz (±1%)

2-2 MKR SIGNAL (cont'd)		
	Modulation:	Calibrated to 95%(±5%) for each tone. Variable from 3% to 96%.
2-3 VOR SIGNAL		
	Tones:	30 Hz (±0.02%) Reference 30 Hz (±0.02%) Variable Phase 9,96 kHz (±0.02%), 480 (±25) Hz Deviation (S/N 1500 and above) 1020 Hz (±1%) Ident
	Modulation:	Calibrated to 30(±2%) for each tone. Variable from 3% to 55%.
	Bearing:	3599 digitally derived courses in 0.1 degree increments. Course Accuracy: ±0.1 degree
2-4 LOC SIGNAL		
	Tones:	90 Hz (±0.02%) 150 Hz (±0.02%) 1020 Hz (±1%) Ident
	Modulation:	90 Hz and 150 Hz modulation levels calibrated to 20%(±2%). Variable from 3% to 35%. Audio Tone modulation levels calibrated to 30%(±2%). Variable from 3% to 55%.
	DDM:	0.093, 0.155 and 0.200 DDM, and Tone Delete. Accuracy: ±0.0013 DDM (1.3 µA). Variable Control: ±0.4 DDM. (See Table in SECTION 3)

2-4 LOC SIGNAL (cont.) Phase Shift:	90 Hz and 150 Hz phase locked to 5 times VOR BEARING SELECT SWITCH setting. 150 Hz selectable (Ref. to 90 Hz) in five degree increments. Accuracy: ±1° Typical. (See Table in SECTION 3)
2-5 G/S SIGNAL Tones:	90 Hz (±0.02%) 150 Hz (±0.02%)
Modulation:	Calibrated to 40% (±2%) for each tone. Variable from 3% to 75%.
DDM:	0.091, 0.175, and 0.40 DDM, and Tone Delete. Accuracy: ±0.0024 DDM (±2.0 µA) Variable Control: ±0.8 DDM. (See Table in SECTION 3)
Phase Shift:	90 Hz and 150 Hz phase locked to 5 times VOR BEARING SELECT SWITCH setting. 150 Hz selectable (Ref. to 90 Hz) in five degree increments. Accuracy: ±1° Typical. (See Table in SECTION 3)
Auxiliary Localizer Signal:	Simultaneously selected and paired with G/S Crystal Signal. Output typically -18 dBm, independent of OUTPUT ATTENUATOR CONTROL setting. Standard Frequency: 108.100 MHz Frequency Accuracy: ±0.005%
2-6 COMM SIGNAL Tones:	1020 Hz (±1%) Ident 400 Hz (±1%) 1300 Hz (±1%) 3000 Hz (±1%)

2-6 COMM SIGNAL (cont.) Modulation:	Calibrated to 30%(±2%) for each tone. Variable from 3% to 55%.
2-7 EXTERNAL MODULATION:	A 10 Hz to 20 kHz, 5 Volts peak to peak signal will typically produce 30% modulation for VOR, LOC, and COMM Signals, and 95% modulation for MKR Signals. G/S Signals cannot be externally modulated. External modulation of VOR, LOC, COMM, and MKR Signals can be varied over the same ranges as the internal modulations discussed above.
2-8 DISTORTION	At Back Panel Demodulated Outputs with Filter (Figure 1-1): 1020 Hz . . . . . 1.00% Max 400 Hz . . . . . 1.00% Max 1300 Hz . . . . . 1.00% Max 3000 Hz . . . . . 1.00% Max 30 Hz . . . . . 0.65% Max 90 Hz . . . . . 0.65% Max 150 Hz . . . . . 0.65% Max At Back Panel Demodulated Outputs without Filter: 1020 Hz . . . . . 2.50% Max 400 Hz . . . . . 2.50% Max 1300 Hz . . . . . 2.50% Max 3000 Hz . . . . . 2.50% Max 30 Hz . . . . . 2.00% Max 90 Hz . . . . . 2.00% Max 150 Hz . . . . . 2.00% Max

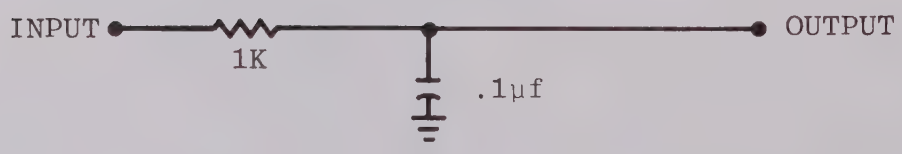

Figure 1-1 Low Pass Filter

2-9 COUNTER CHARACTERISTICS

Functions:	Measures internal signal generator frequencies. Measures frequency of external COMM transmitter. Measures frequency of external signal at Counter Input. Displays internal VOR Bearing as selected on Front Panel.
Clock Oscillator Frequency:	10 MHz
Clock Oscillator Frequency Accuracy:	Accurate within ±0.002% (Typically ±0.0005% over normal temperature and period of use).
Counter Resolution:	Hz . . . . . 1 Hz kHz . . . . . 10 Hz kHz . . . . . 100 Hz MHz . . . . . 1 kHz
External Input Range:	Hz, kHz: 1 MHz to 10 MHz kHz, MHz: 10 MHz to 300 MHz
Impedance:	50Ω a.c. terminated.
Sensitivity:	0.08 V rms (-9 dBm) @ 10 MHz 0.15 V rms (-3 dBm) @ 200 MHz 0.23 V rms (0 dBm) @ 300 MHz
Maximum Counter Input Power:	250 mW RF, or +24 dBm.

CAUTION

DO NOT EXCEED MAXIMUM INPUT POWER LEVEL (250 mW RF, or +24 dBm) TO COUNTER OR DAMAGE TO UNIT MAY RESULT.

2-10 MONITOR METER CHARACTERISTICS

Power Meter:	Function:	Measures COMM transmitter power from 0 to 100 Watts.
	Scales:	0 to 100 Watts 0 to 10 Watts
	Accuracy:	±3% of full scale, plus ±5% of meter indication.
	Maximum Input Power:	20 Watts CW Continuous Duty

TABLE 1-1

INPUT POWER VERSUS TIME LIMITS

Input Power (Watts)	ON Time Limit (Minutes)	Maximum Duty Cycle
20 to 40	5.0	50%
40 to 80	1.0	20%
80 to 100	0.5	10%

RF Level Monitor:		Center of scale indicates proper transmitter RF level
Battery Level:	Scale:	0 to 30 Volts
	Accuracy:	±5% of reading

2-11 Bearing Monitor Circuit:	Range:	±0.5 degrees (0 degrees at meter center)

2-12 SPECTRAL PURITY	Harmonics:	At least 15 dB below carrier level at -30 dBm output level, over entire frequency range.
	Broadband Noise:	At least 70 dB below carrier level at -30 dBm output at ±50 kHz. Spectrum Analyzer Set-up: 10 kHz Frequency Span, 300 Hz Bandwidth, 10 Hz Video Filter.
2-13 POWER	Battery:	An internal NICAD battery system permits a continuous duty cycle for 1.5 hours. The battery charger continuously charges the battery whenever the test set is connected to AC power.
	AC Line:	105 to 120 Vac or 220 to 250 Vac, 50 to 400 Hz, 25 Watts.
2-14 PHYSICAL CHARACTERISTICS	Weight:	17 lbs. (7.7 kg.) complete
	Width:	11.375 in (28.9 cm)
	Height:	5.125 in (13.0 cm)
	Depth:	16.125 in (41.0 cm)

Table 1-2 Tone Modulation Levels

BAND	TONE								
	30Hz	9960Hz	90Hz	150Hz	1020Hz	400Hz	1300Hz	3000Hz	Ext*
MKR	XX	XX	XX	XX	95%	95%	95%	95%	95%
VOR	30%	30%	XX	XX	30%	30%	30%	30%	30%
LOC	XX	XX	20%	20%	30%	30%	30%	30%	30%
G/S	XX	XX	40%	40%	XX	XX	XX	XX	XX
COMM	XX	XX	XX	XX	30%	30%	30%	30%	30%

NOTE: 95% Modulation accuracy ±5% except EXT
40% Modulation accuracy ±2% except EXT
30% Modulation accuracy ±2% except EXT
20% Modulation accuracy ±2% except EXT
XX - Tone not available

*External Input approximately 5Vp-p. Input impedance is 20KΩ in series with 33µf.

3 402AP Specifications.

NOTE

The following specifications concern the difference between the NAV-401L and the NAV-402AP only. Specifications that apply to both sets are covered in SECTION 1 of the basic NAV-401L manual.

3-1 RF OUTPUT Standard Crystal Frequencies:	MKR XTL . . . 75.000 MHz VOR XTL LO. . 108.000 MHz HI. . 112.800 MHz LOC XTL . . . 108.100 MHz G/S XTL LO. . 329.600 MHz HI. . 334.700 MHz COMM XTL. . . 126.90 MHz NOTE Any channel frequency crystal may be custom installed in any of the bands.
Auxiliary Localizer Transmitter:	G/S LO (329.600 MHz) & G/S HI (334.700 MHz) XTLS paired with Dual LOC XMTR XTLS (Primary: 108.100 MHz & Auxiliary: 110.500 MHz) during simultaneous transmission of LOC & G/S signals in G/S XTL operation.
3-2 LOC SIGNAL (Primary or Auxiliary) DDM:	0.092, 0.155, & 0.200 DDM, & Tone Delete. Accuracy: ±0.0013 DDM (±1.3 µA). Variable Control: ±0.4 DDM. (See Table in SECTION 3). LOC Modulation automatically sweeps symmetrically from a center of @ 0 DDM. Peak amplitude is adjustable from 0 to 30 µA (±0.0155 DDM).

1 Introduction.

1-1 Each IFR Precision Simulator is carefully inspected for mechanical and electrical quality before shipment from the factory. On receipt, the instrument should be physically free of mars and scratches, and in perfect mechanical and electrical order.

2 Grounding Requirements.

2-1 To protect operating personnel, the National Electrical Manufacturer's Association (NEMA) recommends that the instrument panel and cabinet be grounded. All IFR instruments are equipped with a three-conductor power cord which, when plugged into an appropriate receptacle, grounds the instrument. The offset pin on the power cord three-prong connector is the ground pin.

2-2 To preserve this protection feature when operating the instrument from a two-contact outlet, use a three-prong to two-prong adapter and connect the green pigtail on the adapter to ground.

3 Installation.

3-1 No special installation procedures are necessary for this equipment.

4 Initial Inspection.

4-1 The instrument should be inspected immediately for possible in-transit physical damage. A check for supplied accessories, and a test of the electrical performance of the instrument (as outlined in SECTION 5 of this manual) should also be made. Any damage or deficiency should be reported immediately to the carrier and a claim filed, if necessary. Refer to the LIMITED WARRANTY AND SERVICE INSTRUCTIONS of this manual for delineation of responsibilities and liabilities. Follow the directions in the LIMITED WARRANTY AND SERVICE INSTRUCTIONS when it becomes necessary to ship the instrument.

5 Cleaning.

5-1 It is wise to clean the dust, cobwebs, and other debris out of the test set prior to periodic inspection, repair or calibration. Some shops clean their test equipment on a regular basis such as biannual or annual proof-of-performance checks.

5-2 Internal chassis parts and frame should be wiped with a lint-free cloth moistened with rubbing alcohol. The Front Panel may also be cleaned with rubbing alcohol. Safety solvent should be used to remove tar and oil from the outside case.

5-3 Dust removal is best done with a hand controlled dry air jet of 25 to 50 psi (1.827 kg/cm^2 to 3.653 kg/cm^2). The Rear Panel should be cleaned with a dry cloth only.

5-4 CARE MUST BE TAKEN TO AVOID BREAKING WIRES OR SHORTING COMPONENT LEADS TOGETHER DURING CLEANING.

6 Inspection Procedures.

6-1 General. Inspection is necessary to determine the general condition of the test set. It has been determined through hard experience that deliberate moving, however slight, of the discrete components on the various PC Boards and other assemblies often causes unnecessary circuit problems and can quickly change simple problems into complex ones. Therefore, IFR recommends ONLY A VISUAL INSPECTION without touching the components. Test set owners and operators should be aware that ANY opening of the instrument casing can result in calibration deviations. Complex modules, such as RF modules, should NOT be opened during Preliminary Inspection.

6-2 Chassis. Inspect the chassis for tightness of subassemblies, damaged chassis-mounted connectors, and corrosion or damage to the metal surface. Surface damage may indicate further damage to parts in the area.

6-3 Capacitors. Inspect all readily available capacitors for loose mounting, deformities or obvious physical damage, and leakage or corrosion around the leads.

6-4 Connectors. Examine all readily accessible coax connectors for loose or broken parts, cracked insulation, and bad contacts. DO NOT disassemble connectors within the test set.

6-5 Potentiometer Controls. Any Front Panel potentiometer control that feels rough when rotated should be checked with an ohmmeter for proper operation.

6-6 Printed Circuit (PC) Boards. (Readily accessible PC Boards only). Check the connectors and mating plugs for corrosion and damage. Inspect all mounted components, including crystals and IC's for damage. The PC Boards should be free of all foreign material.

6-7 Resistors. Inspect all readily available resistors for cracked, broken, charred, or blistered bodies and loose or corroded soldering connections.

6-8 Semiconductors. Inspect all readily available diodes, rectifiers, and transistors for cracked, broken, charred, or discolored bodies. Check the ends of the components to see that the seals around the leads are in place and in good condition.

6-9 Switches. Examine all readily available toggle switches for loose levers, terminals, and switch body connections to frame. The line switch contacts should not be bent or the switch action too loose.

6-10 Transformer. Inspect the transformer for signs of excessive heating, broken or charred insulation, and loose mounting hardware.

6-11 Wiring. Inspect all the wiring of the chassis for broken or loose ends and connections and for proper dress relative to other chassis parts. All the laced wiring should be tight with the ends securely tied.

7 Repacking for Shipping.

7-1 The LIMITED WARRANTY AND SERVICE INSTRUCTIONS contain detailed directions for repacking and shipping. Additional questions may be directed to the IFR Shipping Department.

7-2 Any instrument shipped to IFR for any reason MUST be tagged with: (1) its owner's identification, (2) the service or repair required, (3) its model number, and (4) its full serial number. Identify the instrument by prefix, model, and serial number in ALL correspondence.

7-3 IFR Precision Equipment should be shipped ONLY in their original containers. If the original container is not available, contact IFR for shipping instrunctions.

7-4 DO NOT return an instrument or its component parts to IFR without first receiving authorization from the IFR Customer Service Department. Refer to the LIMITED WARRANTY AND SERVICE INSTRUCTIONS for complete directions.

OPERATION
NAV-401L SECTION 3

1 Introduction.

1-1 This section contains notes on general usage, tables used in operation of the NAV-401L; illustrations and descriptions of all controls, indicators and connectors; description of signals simulated, and operation procedures.

2 Signals Simulated.

2-1 The NAV-401L is a completely self-contained bench and ramp test instrument for: MARKER, VOR, ILS, and COMM equipment. The NAV-401L simulates MARKER signals with Inner (3000 Hz), Middle (1300 Hz) and Outer (400 Hz) tones. VOR Ground Station signals are simulated by an RF signal modulated by a 30 Hz reference signal, a variable 30 Hz signal, and a 9960 Hz signal. Localizer (LOC) signals are simulated by RF modulated by 90 and 150 Hz tones. Glide Slope (G/S) signals are simulated by modulating RF with 90 and 150 Hz tones. A second localizer frequency paired with G/S frequency is available as an option on the NAV-401L (standard on the NAV-402AP). COMM signals are simulated by RF modulated by the 400, 1300, or 3000 Hz MARKER tones or the 1020 Hz IDENT tone. IDENT may also be applied to MARKER, VOR, or Localizer signals.

3 General Usage of NAV-401L.

3-1 Connection to equipment under test, operation of NAV-401L controls and calibration of LOC and G/S course centering accuracy has been made as simple as possible. Bench and ramp operation of the NAV-401L are very similar. Differences in bench and ramp operation are given in the following two paragraphs.

3-2 The NAV-401L is an FCC Type accepted instrument and cannot be used in VAR (variable) frequency modes during ramp use. Any test signals radiated from the antenna must be crystal controlled. IFR does not authorize the NAV-401L to be externally modulated on any band during ramp use. This includes microphones, audio generators, etc.

3-3 During ramp testing, it is recommended to conserve battery power by operating the counter readout only when necessary. A push-button switch that controls power to the readout assembly is part of Counter Mode Switch.

4 Ramp Operation.

4-1 With the possible exception of Marker Beacon, most NAV COMM systems of a typical avionics package may be checked while NAV-401L is placed in a vertical position in the cockpit. The antenna is extended from two to three feet vertically. With the antenna on the RF Output Jack (10), the VOR, LOC, and G/S modes of NAV COMM Receivers may be checked and indicators operated through their limits. The COMM Receiver may also be operated, if desired, modulating the NAV-401L with either the 400, 1300, or 3000 Hz tones or the 1020 Hz IDENT tone.

4-2 On some installations, the Marker Antenna is located far aft on the fuselage. When this situation occurs, and receiver sensitivity is low (-35 to -45 dBm); the NAV-401L situated in the cockpit does not radiate enough RF to operate the Receiver. Moving the NAV-401L outside the aircraft will normally give more than enough signal strength to completely check Marker audio and lights.

4-3 To check COMM transmitter frequencies from cockpit, connect COMM Transmitter Output to COMM Transmitter Input Connector (11) and select MHz on Counter Mode Switch (3). Test set will read out the COMM Tramsmitter frequency when Transmitter is keyed.

5 Bench Operation.

5-1 Bench testing and alignment procedures usually dictate use of direct coax connections between the NAV-401L and equipment under test. NAV-401L Attenuator Dial readout is the RF level in dBm present at RF Output Connector (10) into 50 Ohms. To make accurate sensitivity measurements, the loss in dBm of the connecting coaxes must be known.

CAUTION

Most COMM Receiver Antenna Connectors are also used for the COMM Transmitter Connector. Precautions should be taken not to key the Transmitter with the COMM Antenna Connector connected to the NAV-401L RF Output Connector (10). Damage to the Attenuator and Signal Generator System may result.

6 General Purpose Counter Operation.

6-1 With Tone Select Switch in the CTR IN position, NAV-401L Counter may be utilized as a general utility counter. Frequencies from 1 MHz to 300 MHz can be measured.

6-1 (Cont.) Counter Mode Switch (3) can be used in any of four time base positions; Hz, kHz, kHz, or MHz.

7 Portable Operation.

7-1 Built-in battery supply permits completely portable ramp operation for up to two hours with Counter Readout off and one hour with Counter Readout on. Timer allows ample time for most ramp equipment checks but protects against battery being drained by set.

7-2 Between periods of ramp use, battery should be charged to maintain long life. Charger operation is automatic and is on whenever NAV-401L is connected to a.c. power. The set does not have to be turned on. The charger automatically causes charging current to be proportional to battery charge condition. Overnight charging is recommended.

NOTE

If the NAV-401L test set is used only for bench operation, the NICAD batteries can lose their storage ability. The test set should be periodically operated on battery power to allow the batteries to partially discharge.

7-3 Battery voltage is measured by placing the Monitor Meter Function Switch (30) in BAT position. The 0 to 30% scale shows battery voltage. Less than 12.5 V indicates a discharged battery. Portable operation should never be attempted at this voltage level. An automatic low voltage cutoff circuit will turn the NAV-401L off just below this level. Normal battery charged condition will be indicated as 15 V or greater.

7-4 To operate the LOC and G/S outputs simultaneously, first adjust all controls for normal G/S operation (G/S XTAL mode, only). The Output Attenuator varies the RF level of the G/S signal; and G/S DDM Controls vary the DDM of G/S signal. Next, select LOC with the AVG/PEAK LOC XMTR ON Switch (12). This activates a separate Localizer generator within the NAV-401L. This generator output is combined with the G/S output at the RF Output Connector (10) at the fixed level of -18 dBm (approx.). The Attenuator does not affect LOC output level in this mode. LOC DDM Controls vary the DDM of Localizer signal.

Table 3-1. Correspondence Chart for Decibels, Volts, and Watts (50Ω load)

Decibels	Volts	Watts
+40dBw	709V	10,000W
+39dBw	633V	7,940W
+38dBw	563V	6,320W
+37dBw	501V	5,000W
+36dBw	447V	3,980W
+35dBw	399V	3,160W
+34dBw	355V	2,510W
+33dBw	317V	2,000W
+32dBw	282V	1,590W
+31dBw	252V	1,260W
+30dBw	224V	1,000W
+29dBw	200V	794W
+28dBw	178V	632W
+27dBw	159V	500W
+26dBw	141V	398W
+25dBw	126V	316W
+24dBw	112V	251W
+23dBw	100V	200W
+22dBw	89.1V	159W
+21dBw	79.5V	126W
+20dBw	70.9V	100W
+19dBw	63.3V	79.4W
+18dBw	56.3V	63.2W
+17dBw	50.1V	50.0W
+16dBw	44.7V	39.8W
+15dBw	39.9V	31.6W
+14dBw	35.5V	25.1W
+13dBw	31.7V	20.0W
+12dBw	28.2V	15.9W
+11dBw	25.2V	12.6W
+10dBw	22.4V	10.0W

Decibels	Volts	Watts
+9dBw	20.0V	7.94W
+8dBw	17.8V	6.32W
+7dBw	15.9V	5.00W
+6dBw	14.1V	3.98W
+5dBw	12.6V	3.16W
+4dBw	11.2V	2.51W
+3dBw	10.0V	2.00W
+2dBw	8.91V	1.59W
+1dBw	7.95V	1.26W
0dBw = +30dBm	7.09V	1.00W = 1000mW
+29dBm	6.33V	794mW
+28dBm	5.63V	632mW
+27dBm	5.01V	500mW
+26dBm	4.47V	298mW
+25dBm	3.99V	316mW
+24dBm	3.55V	251mW
+23dBm	3.17V	200mW
+22dBm	2.82V	159mW
+21dBm	2.52V	126mW
+20dBm	2.24V	100mW
+19dBm	2.00V	79.4mW
+18dBm	1.78V	63.2mV
+17dBm	1.59V	50.0mW
+16dBm	1.41V	39.8mW
+15dBm	1.26V	31.6mW
+14dBm	1.12V	25.1mW
+13dBm	1.00V = 1000mV	20.0mW
+12dBm	891mV	15.9mW
+11dBm	795mV	12.6mW
+10dBm	709mV	10.0mW

Table 3-1 (cont.)

Decibles	Volts	Watts
+9dBm	633mV	7.94mW
+8dBm	563mV	6.32mW
+7dBm	501mV	5.00mW
+6dBm	447mV	3.98mW
+5dBm	399mV	3.16mW
+4dBm	355mV	2.51mW
+3dBm	317mV	2.00mW
+2dBm	282mV	1.59mW
+1dBm	252mV	1.26mW
0dBm	224mV	1.00mW = 1000uW
-1dBm	200mV	794uW
-2dBm	178mV	632uW
-3dBm	159mV	500uW
-4dBm	141mV	398uW
-5dBm	126mV	316uW
-6dBm	122mV	251uW
-7dBm	100mV	200uW
-8dBm	89mV	159uW
-9dBm	79mV	126uW
-10dBm	70.9mV	100uW
-11dBm	63.3mV	79.4uW
-12dBm	56.3mV	63.2uW
-13dBm	50.1mV	50.0uW
-14dBm	44.7mV	39.8uW
-15dBm	39.9mV	31.6uW
-16dBm	35.5mV	25.1uW
-17dBm	31.7mV	20.0uW
-18dBm	28.2mV	15.9uW
-19dBm	25.2mV	12.6uW
-20dBm	22.4mV	10.0uW
-21dBm	20.0mV	7.94uW
-22dBm	17.8mV	6.32uW
-23dBm	15.9mV	5.00uW
-24dBm	14.1mV	3.98uW
-25dBm	12.6mV	3.16uW

Decibels	Volts	Watts
-26dBm	11.2mV	2.51uW
-27dBm	10.0mV	2.00uW
-28dBm	8.9mV	1.59uW
-29dBm	7.95mV	1.26uW
-30dBm	7.09mV	1.00uW = 1000nW
-31dBm	6.33mV	794nW
-32dBm	5.63mV	632nW
-33dBm	5.01mV	500nW
-34dBm	4.47mV	398nW
-35dBm	3.99mV	316nW
-36dBm	3.55mV	251nW
-37dBm	3.17mV	200nW
-38dBm	2.82mV	159nW
-39dBm	2.52mV	126nW
-40dBm	2.24mV	100nW
		79.4nW
-41dBm	2.00mV	63.2nW
-42dBm	1.78mV	50.0nW
-43dBm	1.59mV	39.8nW
-44dBm	1.41mV	31.6nW
-45dBm	1.26mV	
-46dBm	1.12mV	25.1nW
-47dBm	1.00mV = 1,000uV	20.0nW
-48dBm	891uV	15.9nW
-49dBm	795uV	12.6nW
-50dBm	709uV	10.0nW
-51dBm	633uV	7.94nW
-52dBm	563uV	6.32nW
-53dBm	501uV	5.00nW
-54dBm	447uV	3.98nW
-55dBm	399uV	3.16nW
-56dBm	355uV	2.51nW
-57dBm	317uV	2.00nW
-58dBm	282uV	1.59nW
-59dBm	252uV	1.26nW
-60dBm	224uV	1.00nW = 100pW

Table 3-1 (cont.)

Decibles	Volts	Watts
-61dBm	200uV	794pW
-62dBm	178uV	632pW
-63dBm	159uV	500pW
-64dBm	141uV	398pW
-65dBm	126uV	316pW
-66dBm	112uV	251pW
-67dBm	100uV	200pW
-68dBm	89.1uV	159pW
-69dBm	79.5uV	126pW
-70dBm	70.9uV	100pW
-71dBm	63.3uV	79.4pW
-72dBm	56.3uV	63.2pW
-73dBm	50.1uV	50.0pW
-74dBm	44.7uV	39.8pW
-75dBm	39.9uV	31.6pW
-76dBm	35.5uV	25.1pW
-77dBm	31.7uV	20.0pW
-78dBm	28.2uV	15.9pW
-79dBm	25.2uV	12.6pW
-80dBm	22.4uV	10.0pW
-81dBm	20.0uV	7.94pW
-82dBm	17.8uV	6.32pW
-83dBm	15.9uV	5.00pW
-84dBm	14.1uV	3.98pW
-85dBm	12.6uV	3.16pW
-86dBm	11.2uV	2.51pW
-87dBm	10.0uV	2.00pW
-88dBm	89.1uV	1.59pW
-89dBm	7.95uV	1.26pW
-90dBm	7.09uV	1.00pW = 1000fW
-91dBm	6.33uV	794fW
-92dBm	5.63uV	632fW
-93dBm	5.01uV	500fW
-94dBm	4.47uV	398fW
-95dBm	3.99uV	316fW

Decibels	Volts	Watts
-96dBm	3.55uV	251fW
-97dBm	3.17uV	200fW
-98dBm	2.82uV	159fW
-99dBm	2.52uV	126fW
-100dBm	2.24uV	100fW
-101dBm	2.00uV	79.4fW
-102dBm	1.78uV	63.2fW
-103dBm	1.59uV	50.0fW
-104dBm	1.41uV	39.8fW
-105dBm	1.26uV	31.6fW
-106dBm	1.12uV	25.1fW
-107dBm	1.00uV = 1,000nV	20.0fW
-108dBm	891nV	15.9fW
-109dBm	795nV	12.6fW
-110dBm	709nV	10fW
-111dBm	633nV	7.94fW
-112dBm	563nV	6.32fW
-113dBm	501nV	5.00fW
-114dBm	447nV	3.98fW
-115dBm	399nV	3.16fW
-116dBm	355nV	2.51fW
-117dBm	317nV	2.00fW
-118dBm	282nV	1.59fW
-119dBm	252nV	1.26fW
-120dBm	224nV	1.00fW = 1000aW
-121dBm	200nV	794aW
-122dBm	178nV	632aW
-123dBm	159nV	500aW
-124dBm	141nV	398aW
-125dBm	126nV	316aW
-126dBm	112nV	251aW
-127dBm	100nV	200aW
-128dBm	89.1nV	150aW
-129dBm	79.5nV	126aW
-130dBm	70.9nV	100aW

Table 3-1 (cont.)

Decibles	Volts	Watts
-131dBm	63.3nV	79.4aW
-132dBm	56.3nV	63.2aW
-133dBm	50.1nV	50.0aW
-134dBm	44.7nV	39.8aW
-135dBm	39.9nV	31.6aW

Decibels	Volts	Watts
-136dBm	35.5nV	25.1aW
-137dBm	31.7nV	20.0aW
-138dBm	28.2nV	15.9aW
-139dBm	25.2nV	12.6aW
-140dBm	22.4nV	10.0aW

dBw - decibels referenced to one watt
dBm - decibels referenced to one milliwatt
V - volts
mV - millivolts (volts x 10^{-3})
uV - microvolts (volts x 10^{-6})
nV - nanovolts (volts x 10^{-9})
W - watts
mW - milliwatts (watts x 10^{-3})
uW - microwatts (watts x 10^{-6})
nW - nanowatts (watts x 10^{-9})
pW - picowatts (watts x 10^{-12})
fW - femtowatts (watts x 10^{-15})
aW - attowatts (watts x 10^{-18})

Table 3-2. Correspondence Charts for 90Hz and 150Hz Tones

LOCALIZER

Tone Difference Values			Course Deviation Indicator	
90Hz and 150Hz % Modulation	DDM	Decibels	Deflection	Microamps
20.00, 20.00	0	0	Centered	0
15.35, 24.65	.093	4.114	Standard	90
12.25, 27.75	.155	7.102	Full Scale	150
10.00, 30.00	.200	9.542	More than full scale	194
0.00, 40.00	.4	Infinity	Full one tone delete other	387

NOTE: ·Standard CDI deflection = 30% of full scale (linear movement).
·Deflections in microamps apply to indicators with full scale deflection current of 150µA.

GLIDE SLOPE

Tone Difference Values			G/S Deviation Indicator	
90Hz and 150Hz % Modulation	DDM	Decibels	Deflection	Microamps
40.00, 40.00	0	0	Centered	0
35.45, 44.55	.091	1.988	Standard	78
31.25, 48.75	.175	3.622	Full Scale	150
20.00, 60.00	.400	9.542	More than full scale	343
0.00, 80.00	.8	Infinity	Full one tone delete other	686

NOTE: ·Standard G/S indicator deflection = 53% of full scale (linear movement).
·Deflections in microamps apply to indicators with full scale deflection current of 150µA.

Table 3-3. 150Hz and 90Hz Tones Variable Phase Relationships

VOR BRG Switch Position	150Hz Phase Relative to 90Hz
000.0	0°
001.0	+5°
002.0	+10°
003.0	+15°
004.0	+20°
005.0	+25°
006.0	+30°
007.0	+35°
008.0	+40°
009.0	+45°
010.0	+50°
011.0	+55°
012.0	+60°
013.0	+65°
014.0	+70°
015.0	+75°
016.0	+80°
017.0	+85°
018.0	+90°
019.0	+95°
020.0	+100°
021.0	+105°
022.0	+110°
023.0	+115°
024.0	+120° or 0° *

* +120° will have the same phase relationship as 0°; therefore, only 1° through 12° BRG switch positions need be used.

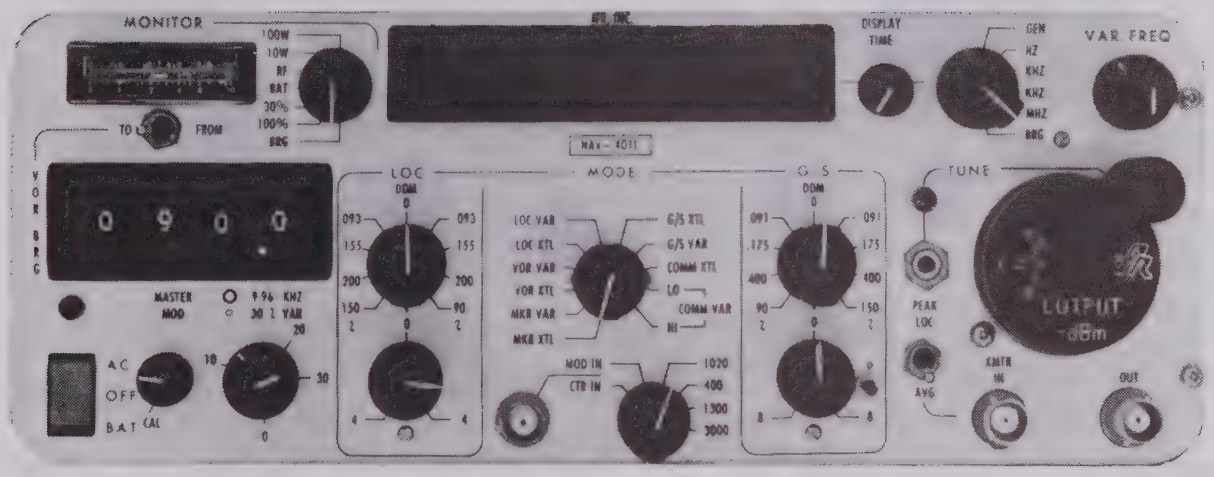

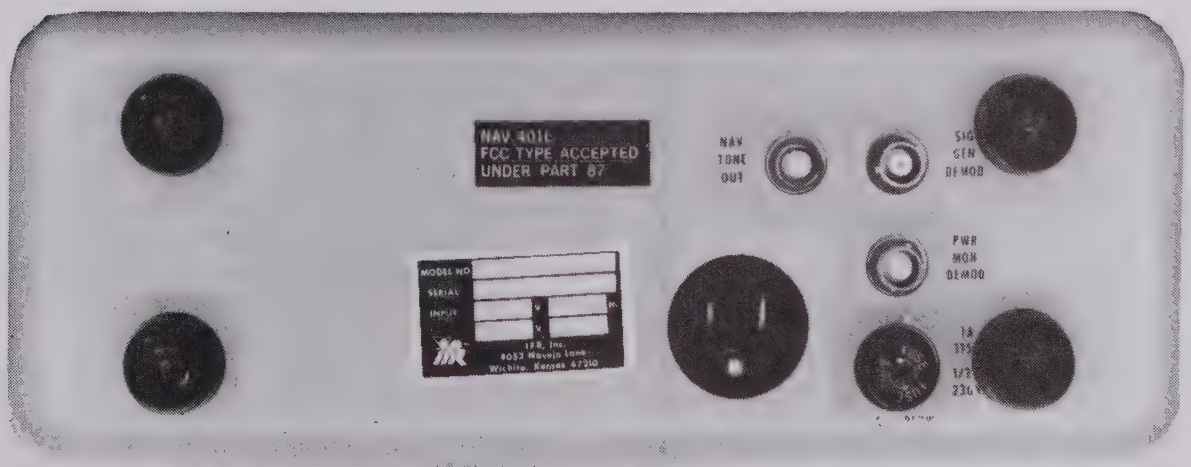

Fig. 3-1 NAV-401L Front and Rear Views

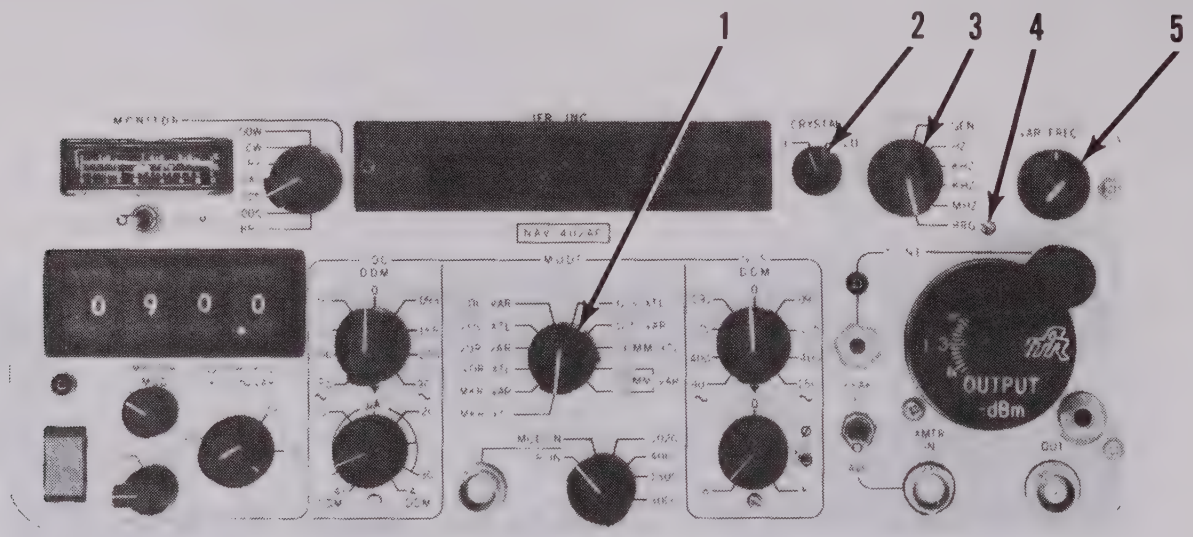

Fig. 3-2AP

CONTROL/INDICATOR/CONNECTOR	FUNCTION
1. Frequency Mode Switch	Selects frequency band to be used: MARKER (MKR), VOR, Localizer (LOC), Glide Slope (G/S), or COMM. Each band except COMM is divided into two positions: a crystal controlled frequency position, and a variable frequency position. COMM band utilizes three switch positions: a crystal controlled position, and two variable frequency positions.
2AP. Crystal HI/LO Switch	Selects high or low frequency crystal in G/S XTL and VOR XTL modes. In G/S XTL, this switch also applies modulation to the appropriate Localizer Transmitter. Localizer Transmitter is frequency paired with each G/S crystal when AVG/PEAK LOC XMTR ON Switch (12) is in LOC-PEAK position.

CONTROL/INDICATOR/CONNECTOR	FUNCTION
3. Counter Mode Switch	Selects source of signal to be counted. In GEN position, displays frequency of internal signal generator. In Hz, kHz, kHz, or MHz positions, Counter measures frequency of a COMM Transmitter connected to XMTR IN Connector, or external signal source. External signal (continued on page 3-13)

CONTROL/INDICATOR/CONNECTOR	FUNCTION
3. (Cont.) Counter Mode Switch	must be applied to MOD IN/CTR IN Connector (18). In BRG (Bearing) position, the input to Counter is the output of digital bearing determining circuitry. Display should equal VOR BRG Switch (27) indication. This provides a check on bearing selection circuits. In BRG position, bearing monitor circuitry also checks VOR modulation for proper operation at 90° A pushbutton switch is incorporated into Counter Mode Switch which applies power to Counter Readout in either battery or a.c. operation. This switch is activated by depressing Counter Mode Switch Knob. It is highly recommended during portable operation to use Counter Readout only when necessary.
4. Meter Bearing Center Adjust	Used to center Monitor Meter (29) to set a reference level in internal bearing check operation. Monitor Meter Function Switch (30) should be in the BRG position and Counter Mode Switch (3) should be in any position except BRG while the Meter is being centered.
5. Variable Frequency Controls	Coarse and fine controls used to manually sweep the Internal Signal Generator frequency. CW rotation of these controls increases the frequency. Frequency Mode Switch (1) must be in a VAR position for manual sweeping. Coarse Control, larger knob, gives from 1 to 2 MHz deviation per turn. Fine Control, smaller knob, gives approximately 20 to 40 kHz deviation per turn.

Table 3-4 (Cont.)

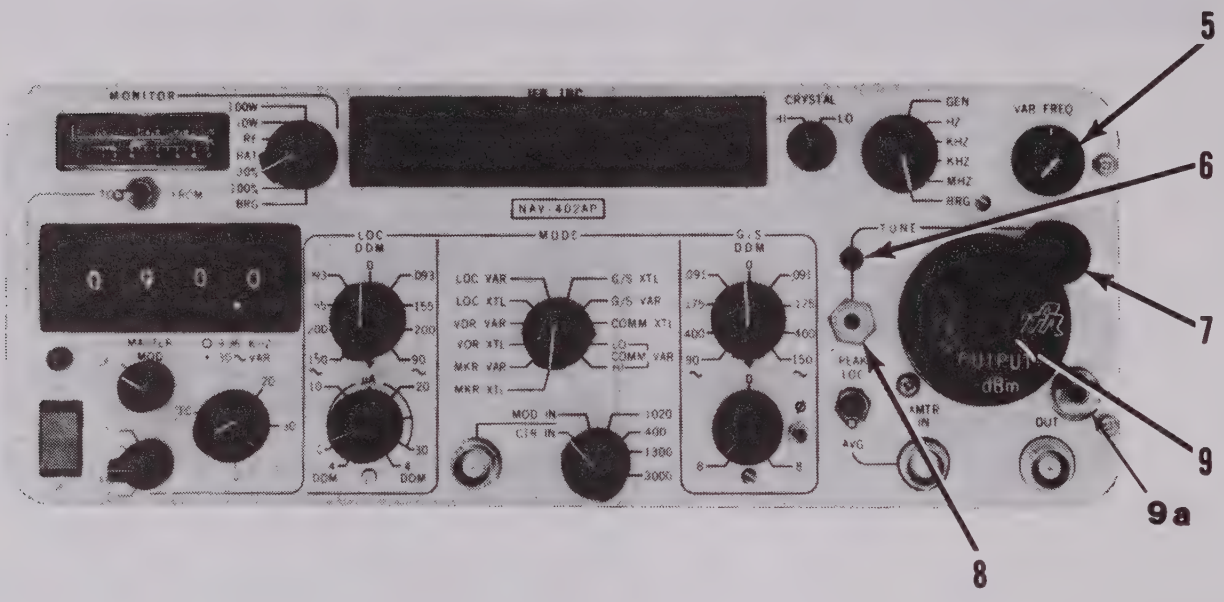

Fig. 3-3AP

CONTROL/INDICATOR/CONNECTOR	FUNCTION
5. (Cont.) Variable Frequency Controls	Phase Lock Circuit. Phase Lock Circuit is activated by turning the Fine Variable Frequency Control full CCW, into the detent position. Phase lock can be obtained every 25 kHz in variable frequency modes, except for G/S. G/S frequencies are phase locked in 50 kHz increments. Coarse Variable Frequency Control is used to select desired phase locked frequencies. Phase lock is indicated by proper count on the Frequency Counter (31). It is necessary to adjust for phase locked steps since pull-in range of phase lock circuit is less than 25 kHz. A phase lock on any frequency other than 25 or 50 kHz steps is not valid and will have severe frequency modulation (FM). NOTE Variable Frequency Oscillator should not be adjusted to a frequency within ±5 kHz of an XTAL frequency to avoid interaction between oscillator circuits.

Table 3-4 (Cont.)

CONTROL/INDICATOR/CONNECTOR	FUNCTION
6. Tune Indicator	Indicates proper Signal Generator tuning. Tune Indicator is extinguished when Generator is properly tuned.
7. Tune Control	Adjusts Signal Generator for optimum tuning. It must be readjusted whenever a different frequency band is used or when Variable Frequency Controls (5) change frequency more than a few MHz in any one band. Tune Control should also be adjusted whenever Attenuator (9) is set for an output level from -15 dBm to max output level available, or whenever setting of Attenuator is changed within this range.
8. Fine Tune Switch	Fine tunes the Transmitter when tuning is within fine tune range and the Tune Indicator (7) is extinguished. When Fine Tune Switch is pressed, Tune Control (6) is adjusted for a minimum indication on Monitor Meter (29).
9. Output Attenuator Control	Used to adjust RF level of Signal Generator Output at the RF Output Connector (10) into a 50Ω load. Attenuator Dial is calibrated in -dBm or dB below 1 mW. The dial is accurate for output levels below -30 dBm. An Attenuator Correction Chart is included with each instrument. Also included is a chart converting -dBm to soft microvolts. NOTE Soft Microvolts - microvolts as measured with 50Ω loading. Hard Microvolts - microvolts as measured through a 6 dB pad, into 50 Ohms.

Table 3-4 (Cont.)

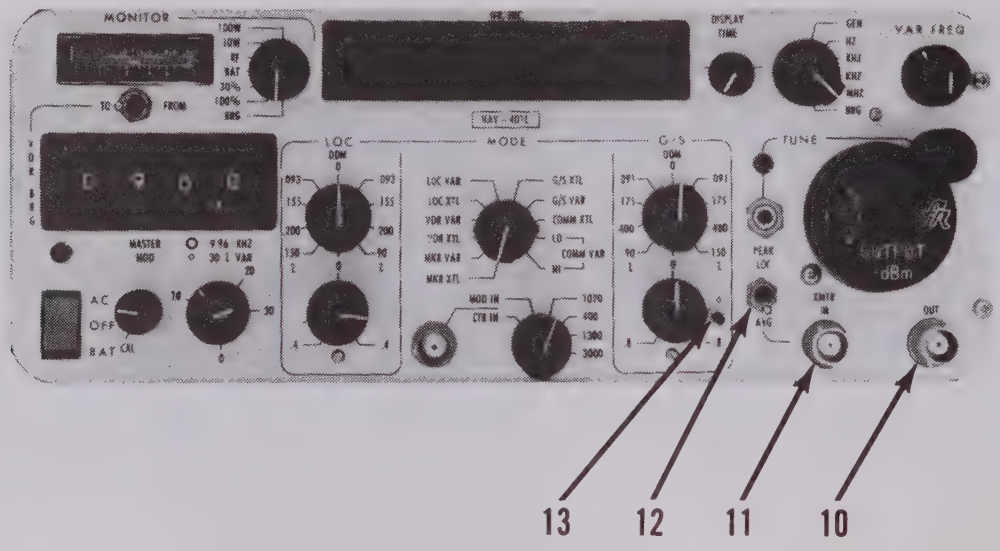

Fig. 3-4

CONTROL/INDICATOR/CONNECTOR	FUNCTION
9a. A-100 Amp Voltage Supply Connector	Provides power supply voltage for A-100 Amp. CAUTION CONNECTOR IS NOT TO BE USED FOR ANY AUXILIARY EQUIPMENT EXCEPT THE A-100 AMP.
10. RF Output Connector	Provides Attenuated Signal Generator Output to equipment under test. This connector is diode protected against a COMM Transmitter being accidently keyed, but steps should be taken to make sure than keying does not occur. Output is source terminated in 50 Ohms.
11. COMM Transmitter Input Connector	Input to Monitor Meter (29). It is connected with a 50Ω cable to a COMM Transmitter for power and frequency measurement purposes. Power indicated is either peak or average power. COMM Transmitter frequency is indicated on Digi-tal Display (31) with Counter

Table 3-4 (Cont.)

CONTROL/INDICATOR/CONNECTOR	FUNCTION
11. (Cont.) COMM Transmitter Input Connector	Mode Switch (3) in Hz, kHz, kHz, or MHz positions. An internal 25 dB pad is used in series with Power Monitor Circuit. NOTE See SECTION 1, Technical Summary for Power Meter input power vs. time requirements.
12. AVG/PEAK LOC XMTR ON Switch	Selects function of Power Meter (29). In PEAK position, the Power Meter indicates peak power amplitude of a COMM Transmitter with modulation applied. Peak Position also provides output from the separate Localizer Transmitter simultaneously with the Glide Slope signal, with Frequency Mode Switch (1) in the G/S XTAL position (for checking Autopilots or Course Computers). In AVG position, Power Meter indicates average RF power of a COMM Transmitter and disregards power changes due to proper modulation.
13. 90/150 Hz Variable Phase (ϕ) Switch	When Variable Phase (ϕ) Switch is depressed, phase of 150 Hz tone can be varied in 5^0 steps by use of VOR Bearing Select Switches (27). Normally, 150 and 90 Hz tones used for LOC and G/S modulation are phase-locked together. If VOR Bearing Select Switches are set to 000.0^0, depressing Variable Phase (ϕ) Switch produces no change of phase. For each 1^0 step of VOR Bearing Select Switch, 150 Hz tone is shifted $+5^0$ relative to the 90 Hz tone. 90 Hz tone always remains constant in phase with respect to 000.0^0 VOR Bearing Select Switch position.

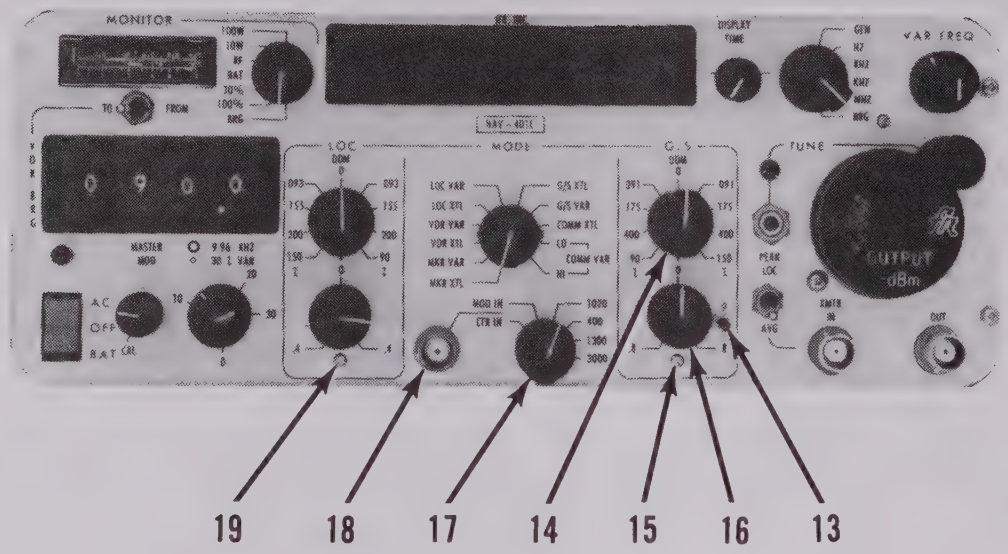

Fig. 3-5

CONTROL/INDICATOR/CONNECTOR	FUNCTION
13. (Cont.) 90/150 Hz Variable Phase (ϕ) Switch	When 24° VOR Bearing is selected, 90 and 150 Hz tones are at their original phase relationships. When a 12° VOR Bearing is selected, amplitude summation of the 90 and 150 Hz tones is at maximum magnitude.
14. Glide Slope DDM Control	Selects amount of G/S pointer deviation on ILS Indicator under test. Calibrations in DDM (Difference in Depth of Modulation) represent standard deflection, full scale, and greater than full scale deflections. CW rotation of control gives upward deflection. In either 90 Hz or 150 Hz positions, the opposite tone is deleted and selected tone is at the same level as the on-course value (40%) so that a flag test can be made. Localizer DDM Control (21) should not be in the 90 or 150 Hz position when using Glide Slope function. This would cause either 90 or 150 Hz tone to be deleted by LOC DDM Control (21).

Table 3-4 (Cont.)

CONTROL/INDICATOR/CONNECTOR	FUNCTION
14. (Cont.) Glide Slope DDM Control	Continuous Wave (CW) operation can be obtained by placing G/S DDM Control (14) on 150 Hz and LOC DDM Control (21) on 90 Hz or vice versa.
15. Glide Slope Centering Adjust Control	Varies the amplitude of 90 Hz tone and is used as an exact course centering control for Glide Slope modulation.
16. Glide Slope Variable DDM Control	Continuously varies G/S pointer deflection from 0.8 DDM, down through 0 DDM to 0.8 DDM up. CW rotation of this control gives upward pointer deflection. G/S DDM Control (14) must be in arrow position (index mark down, directly toward G/S Variable DDM Control).
17. Tone Select Switch	Selects modulation input to internal Signal Generator or input to the Counter. In the MOD IN position, Modulation Input/External Frequency Counter Input Connector (18) is used as input to the Signal Generator. In any of four tone positions, a tone is selected to modulate various frequency bands selected by the Frequency Mode Switch (1). Glide Slope band cannot be externally modulated. When CTR (Counter) IN position is selected, Modulation Input/External Frequency Counter Input Connector (18) is used as input to the Digital Counter.
18. Modulation Input/ External Frequency Counter Input Connector	External input to the Counter or external input to the Signal Generator. See paragraphs on Counter Mode Switch (3) and Tone Select Switch (17) for further information.
19. Localizer Centering Adjust	Varies amplitude of 90 Hz tone and is used as an exact course centering control for Localizer modulation.

Table 3-4 (Cont.)

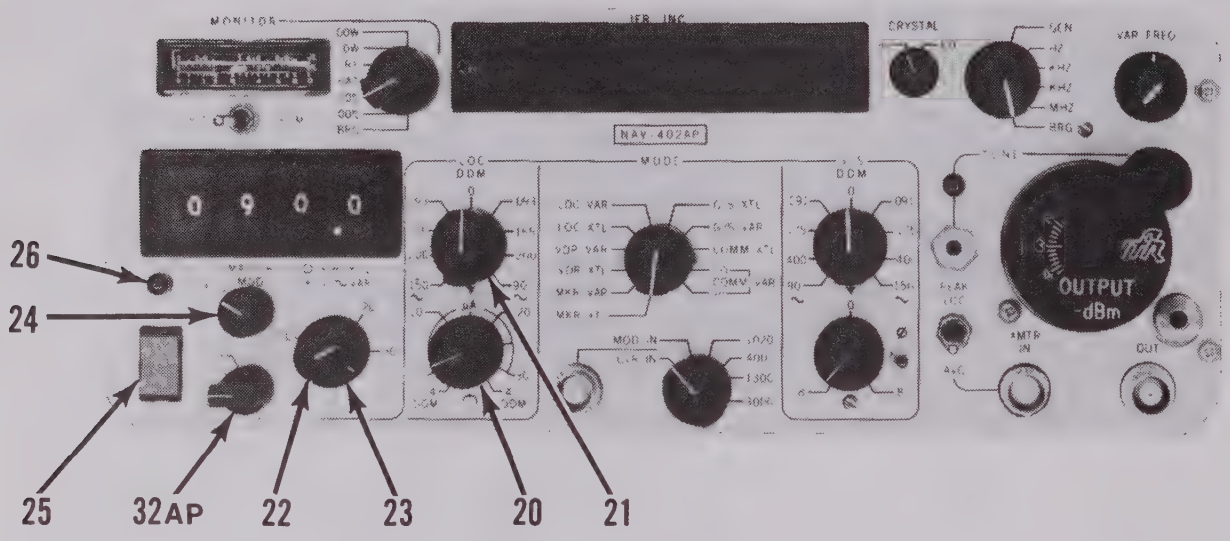

Fig. 3-6AP

CONTROL/INDICATOR/CONNECTOR	FUNCTION
20AP. Localizer Variable DDM/ DDM Sweep Amplitude Control	Localizer DDM Sweep Switch (32AP) in "0" position: Continuously varies LOC pointer deflection from 0.4 DDM left through 0 DDM to 0.4 DDM right. CW rotation of this control gives right pointer deflection. LOC DDM Control (21) must be in arrow position (index mark down, directly toward LOC Variable DDM Control). Localizer DDM Sweep Switch (32AP) is SL or SR position: Sets maximum deflection left and right during DDM sweep. Maximum DDM sweep is obtained by setting control (20AP) full cw.
32AP. Localizer DDM Sweep Switch	"0" position: Causes Localizer Variable DDM/DDM Sweep Amplitude Control (20) to act as Variable LOC DDM Control. AL & AR positions: Initializes internal circuitry prior to selection of SL (Sweep Left) or SR (Sweep Right) and presets sweep circuitry to 0 DDM. AL or AR must

Table 3-4 (Cont.)

CONTROL/INDICATOR/CONNECTOR	FUNCTION
3-32AP (Cont.)	be selected each time DDM sweep is to be initiated. When the Localizer DDM Sweep Switch (32AP) is in the AL or AR position and LOC DDM Control (21) is in the arrow position; rotation of the LOC VAR DDM/DDM Sweep Amplitude Control (20AP) varies the sweep amplitude from 0 to 30 µA (+/- .0155). SL position: Initiates LOC DDM sweep. LOC DDM Control (21) must be in the arrow position. Sweep begins at 0 DDM and LOC pointer begins deflecting to the left until maximum left pointer deflection [as determined by LOC VAR DDM/DDM Sweep Amplitude Control (20AP)] is reached. When maximum left pointer deflection is reached, the direction of sweep is reversed until the maximum right pointer deflection [as determined by control (20AP)] is reached. Sweep is symmetrical with respect to 0 DDM. SR position: Initiates LOC DDM sweep. Operation identical to SL position, except initial sweep direction is toward LOC pointer right.
21. Localizer DDM Control	Selects amount of deviation of LOC pointer of an ILS Indicator under test. Calibrated in DDM, switch positions correspond to standard deflection, full scale, and greater than full scale deflections.

CONTROL/INDICATOR/CONNECTOR	FUNCTION
21. (Cont.)	In either 90 or 150 Hz position, the opposite tone is deleted and selected tone is at the same level as the on course value (20%) so that a flag test can be made. The G/S DDM Control (14) should not be in the 90 and 150 Hz position when using the Localizer function. This would cause the 90 or 150 Hz tone to be deleted by G/S control. (continued on Page 3-21)

Table 3-4 (Cont.)

CONTROL/INDICATOR/CONNECTOR	FUNCTION
21. (Cont.) Localizer DDM Control	Continuous wave (CW) operation can be obtained by placing G/S DDM Control (14) on 150 Hz and LOC DDM Control (21) in 90 Hz position or vice versa.
22. 30 Hz VAR Level Control	Changes percentage of modulation of 30 Hz VAR tone of VOR Composite Signal from 0 to 30%. It reaches 30% when knob is turned past the 30% line to the stop.
23. 9960 Hz REF Level Control	Changes percentage of modulation of 9.960 kHz tone of VOR Composite Signal from 0 to 30%. It reaches 30% when the knob is turned past 30% line to the stop.
24. Master Modulation Level Control	Controls modulation level of all modulating tones. In CAL (detent) position (full ccw), modulation levels of each type of signal (LOC, G/S, etc.) are fixed at their proper values of 20%, 30%, 40%, 95%, etc. In other than CAL position, control varies level of modulation of any signal from 0 to approximately twice normal level for that signal. For example, VOR IDENT tone is 30% in CAL position, and 0 to 60% in variable operation.
25. AC/Battery Power Switch	Controls power to NAV-401L. It is a three position, center off switch. When AC is selected, test set is powered from a.c. line. When switch is depressed to BATT, which is a momentary position battery timer is activated. Test set will now operate on battery power until timer turns test set off, or until AC/Battery Power Switch is again depressed to BATT position. Time limit for battery timer is from 6 to 10 minutes.
26. Power On Indicator	Illuminates when ac or battery power is applied to the set.

Table 3-4 (Cont.)

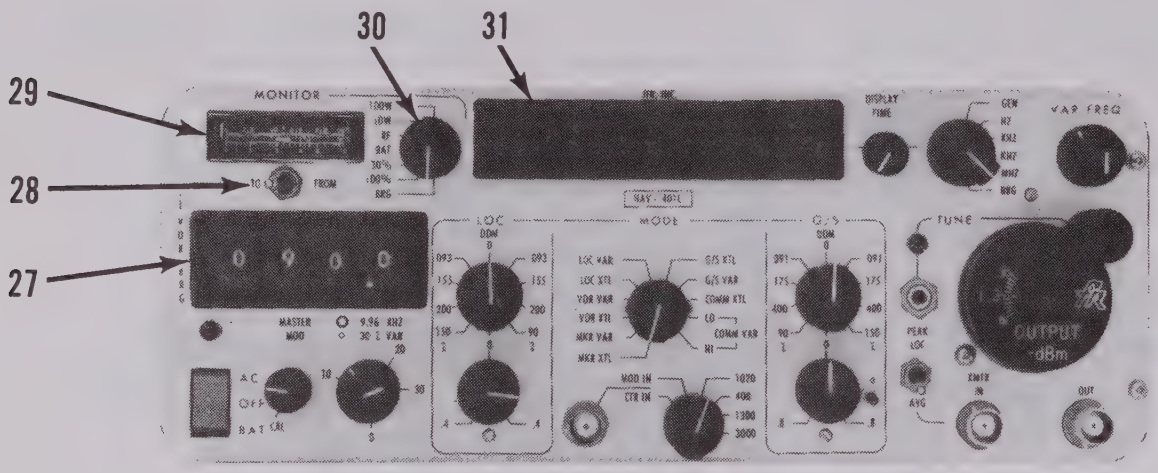

Fig. 3-7

CONTROL/INDICATOR/CONNECTOR	FUNCTION
27. VOR Bearing Select Switches	Four thumbwheel switches select VOR Bearing that is to be simulated by the NAV-401L. The Hundreds Digit Thumbwheel Switch (on left) is stopped at 3. Bearing indications from 360 through 399.9^0 are not valid.
28. VOR Bearing TO/FROM Switch	Changes selected VOR Bearing to reciprocal bearing for flag tests, etc.
29. Monitor Meter	Provides analogue indication of RF power, Signal Generator RF Output Level, battery voltage, percent modulation of Signal Generator, and indication at 90^0 that VOR bearing circuitry is functioning properly.

Table 3-4 (Cont.)

CONTROL/INDICATOR/CONNECTOR	FUNCTION
30. Monitor Meter Function Switch	Selects Monitor Meter function. COMM Transmitter power is measured on two scales: 0-10 Watts and 0-100 Watts. RF position is used to indicate proper RF leveling of Signal Generator. In BATT position, the 0 to 30% scale is used to read battery voltage. Less than 12.0 V indicates a discharged battery. A fully charged battery should indicate more than 15 V. 30% and 100% switch positions are used to measure modulation level of Signal Generator. BRG switch position allows VOR Generator to be checked at 90^0. Center of the band indicates a 0^0 bearing error. Left and right meter scale limits indicate VOR Bearing errors of ±0.5%.
31. Digital Display	Provides digital readout of: Selected VOR Bearing, Internal Generator frequency, external signal source frequency, or COMM Transmitter frequency. Function displayed is controlled by Counter Mode Switch (3). For details of operation, see paragraphs on Counter Mode Switch (3) and Display Time Control (2).

Table 3-4 (Cont.)

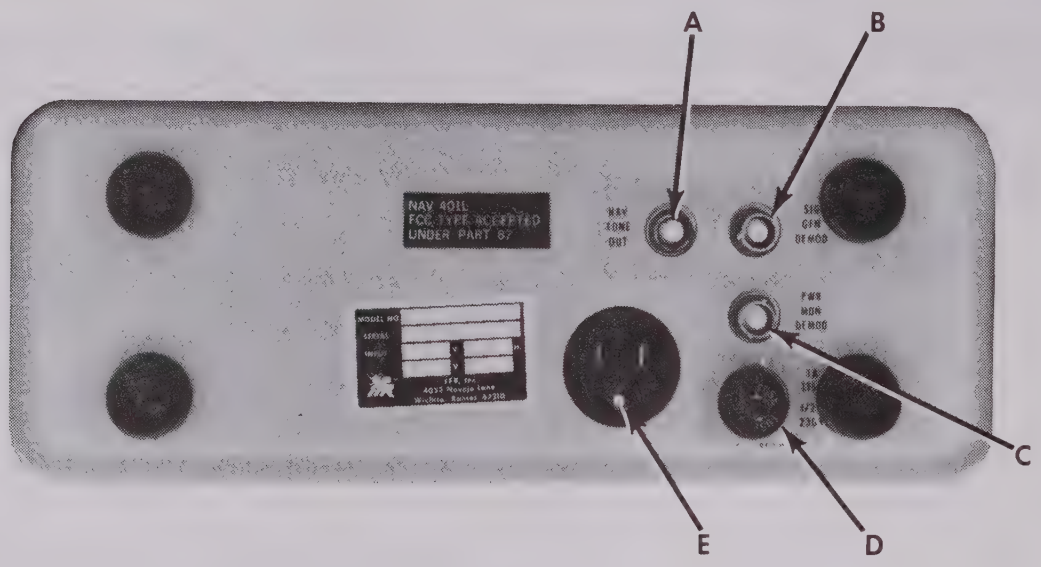

REAR PANEL CONTROL/INDICATOR/CONNECTOR	FUNCTION
A. NAV Tones Demodulated Output Connector	Provides audio output used to test VOR Bearing Circuits or Deviation Circuits of LOC and G/S NAV Receivers. Output level is varied by use of Master Mod Control (24) from approximately 0 to 7 Vp-p into 1000 ohms. The connector also provides access to the audio modulation of MARKER and COMM signals. The connector is internally connected to the NAV-401L Modulator.
B. Signal Generator Demodulated Output Connector	Provides demodulated output of Signal Generator. This output is to be used as a monitoring capability and is not intended to feed VOR and ILS Converters. If output voltage available is adequate and the approximately +4.25 Vdc. component is not objectionable, the output can be used to drive a Converter.

Table 3-4 (Cont.)

REAR PANEL CONTROL/INDICATOR/CONNECTOR	FUNCTION
C. COMM Transmitter Demodulated Output Connector	Provides access to demodulated output of a COMM Transmitter. This may be used to display modulation on an Oscilloscope or to listen to modulation via an External Amplifier
D. Fuseholder	
E. AC Power Connector	

Table 3-4 (Cont.)

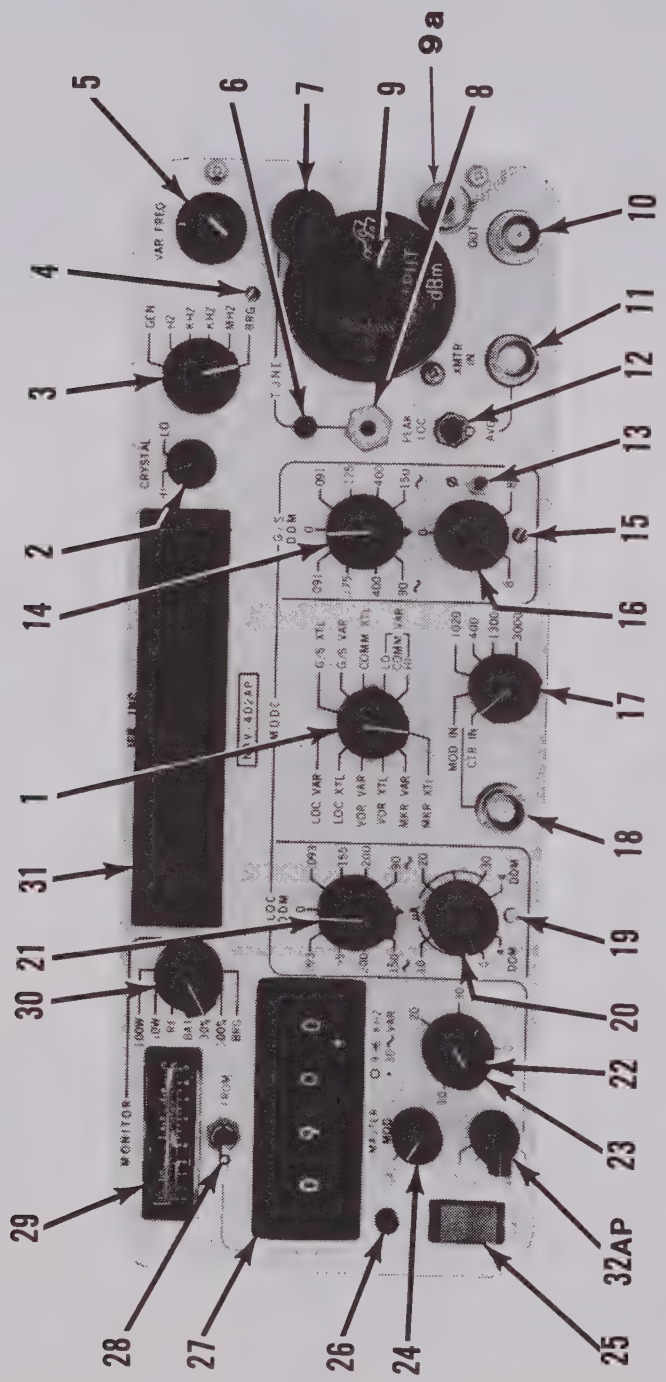

Fig. 3-9AP NAV-402AP Front Panel Controls, Indicators and Connectors (all)

1. MARKER OPERATION

Monitor Meter & Switch (29) & (30)	RF - To verify proper leveling of Signal Generator. 100% - Use to verify 95% modulation of Signal Generator.
Counter Mode Switch (3)	GEN - To read out frequency of Generator in crystal or Variable modes.
Frequency Mode Switch (1)	MKR XTAL - Mandatory in ramp operation; used on bench for standard Marker center frequency. MKR VAR - Useful to check receiver bandwidths, etc. Can be phase-locked in 25 kHz steps.
VAR Freq Controls (5)	Use as necessary in MKR VAR to check bandwidth of Receiver.
Tune Controls (7) & (8)	Tune Generator output for Tune Indicator (6) off, and dip on Monitor Meter (29).
Output Attenuator (9)	Use as necessary to establish receiver sensitivities.
RF Out Connector (10)	Connect to RECEIVER ANTENNA Connector, or attach Antenna in ramp operation.
Tone Select Switch (17)	Select tone - 1020 (Ident tone) 400, 1300, 3000 Hz as desired.
Master Mod Level Control (24)	Set to CAL for 95% or variable from 0 to 98%.
Power Switch (25)	AC or Battery as desired.

Table 3-5 Typical Test Control Settings

2. VOR OPERATION

Monitor Meter & Switch (29) & (30)	RF - To verify proper leveling of Signal Generator. 30% or 100% - Used to verify or set 30% modulation of each VOR modulating tone. BRG - Use to verify operation of bearing signal at 90° (Internally).
Counter Mode Switch (3)	GEN - To read out frequency of Generator in crystal or variable modes.
Frequency Mode Switch (1)	VOR XTAL - Mandatory in ramp operation; used on bench for a very stable channel center frequency.
	VOR VAR - Can be phase-locked in 25 kHz steps for all channel bench operation or to check receiver bandwidths, etc.
VAR Freq Controls (5)	Use in VOR VAR Mode to change VOR frequency either in 25 kHz steps or to continuously sweep frequency.
Tune Controls (7) & (8)	Tune Generator output for Tune Indicator (6) out and dip on meter (29).
Output Attenuator (9)	Use as necessary to establish receiver sensitivities.
RF Out Connector (10)	To Receiver Antenna Connector, or attach Antenna in ramp operation.
Tone Select Switch (17)	Select IDENT tone - 1020 Hz (or others if desired)
30 Hz VAR Level Control (22)	Use to vary the modulation level of the 30 Hz component from 0 to 30%.
9.96 kHz REF Level Control (23)	Use to vary the modulation level of the 9.96 kHz component from 0 to 30%.

Table 3-5 (Cont.)

Master Mod Level Control (24)	Set to CAL for 30% each VOR tone or variable from 0 to 60% each tone.
Power Switch (25)	AC or Battery as desired.
VOR BRG Select Switches (27)	To bearing desired for radial testing and alignment.
VOR Bearing TO/FROM Switch (28)	Use to achieve exact reciprocals of bearings selected and for flag test of Indicators.
Crystal HI/LO Switch (2AP)	Use to select between the two crystals in VOR XTL Mode.

3. LOC OPERATION

Monitor Meter & Switch (29) & (30)	RF - To verify proper leveling of Signal Generator. 30% - Verify or set 20% modulation of each modulating tone and set course centering.
Counter Mode Switch (3)	GEN - To read out frequency of Generator in crystal or variable mode.
Frequency Mode Switch (1)	LOC XTL - Mandatory in ramp operation: used on bench for a very stable channel center frequency. LOC VAR - Can be phase-locked in 25 kHz steps for all channel bench operation or to check receiver bandwidths, etc.
VAR Freq Controls (5)	Use in LOC VAR mode. Change LOC frequency either in 25 kHz steps or to continuously sweep frequency.
Tune Controls (7) & (8)	Tune Generator output for Tune Indicator (6) out and dip on meter (29).
Output Attenuator (9)	Use as necessary to establish receiver sensitivities.

Table 3-5 (Cont.)

RF Out Connector (10)	To Receiver Antenna Connector, or attach Antenna in ramp operation.
Tone Select Switch (17)	Select IDENT Tone - 1020 Hz (or others if desired).
LOC DDM Control (21)	Stepped - Used for precise amounts of deflection and flag tests.
LOC VAR DDM/DDM Sweep Amplitude Control (20AP)	Used for checking Auto-pilot Servos, meter stickiness, etc, or to set DDM sweep amplitude.
LOC DDM Sweep Switch (32AP)	Used to select initial direction of DDM sweep.
Master Mod Level Control (24)	Set to CAL for 20% each course tone and 30% Ident Tone, or variable 0 to 40% each course tone and 0 to 60% Ident Tone.
Power Switch (25)	AC or Battery as desired.

4. G/S OPERATION

Monitor Meter & Switch (29) & (30)	RF - To verify proper leveling of Signal Generator. 100% - Verify or set 40% modulation of each modulating tone and set course centering.
Counter Mode Switch (3)	GEN - To read out frequency of Generator in crystal or variable mode.
Frequency Mode Switch (1)	G/S XTL - Mandatory in ramp operation; used on bench for a very stable channel center frequency. G/S VAR - G/S can be phase locked in 50 kHz steps for all channel bench operation or to check receiver bandwidths, etc.
Crystal HI/LO Switch (2AP)	Use to select between the two crystals in G/S XTL mode.

Table 3-5 (Cont.)

VAR Freq Controls (5)	Use in G/S VAR Mode to change G/S frequency either in 50 kHz steps or to continuously sweep frequency.
Tune Controls (7) & (8)	Tune Generator output for Tune Indicator (6) off and dip on meter (29).
Output Attenuator (9)	Use as necessary to establish receiver sensitivities.
RF Out Connector (10)	To Receiver Antenna Connector, or to attach Antenna in ramp operation.

G/S DDM Control (14) & (16)	Stepped - Used for precise amount of deflection and flag tests. VAR - Used for checking auto-pilot servos, meter stickiness, etc.
Master Mod Level Control (24)	Set to CAL for 40% each course tone, or variable 0 to 80%.
Power Switch (25)	AC or Battery as desired.
AVG/PEAK LOC XMTR Switch (12)	LOC position if simultaneous G/S and LOC output desired. NOTE: Frequency Mode Switch should be in G/S XTAL position.

5. COMM OPERATION (RECEIVER TESTS)

Monitor Meter and Switch (29) & (30)	RF - To verify proper leveling of signal Generator. 30% or 100% - Verify or set 30% sine-wave modulation tone.
Counter Mode Switch (3)	GEN - To read out frequency of Generator in crystal or variable mode.
Frequency Mode Switch (1)	COMM XTAL - Mandatory in ramp operation; used on bench for a very stable channel center frequency. COMM VAR LO - Use to check COMM Receiver channels 118.0 to 135.95 MHz. COMM VAR HI - Use to check COMM Receiver channels 134.0 to 150 MHz.
VAR Freq Controls (5)	Use in COMM VAR modes to change COMM frequency in 25 kHz steps or to continuously sweep frequency.
Tune Controls (7) & (8)	Tune Generator output for Tune Indicator (6) out and dip on Meter (29).
Output Attenuator (9)	Use as necessary to establish receiver sensitivities.

Table 3-5 (Cont.)

RF Out Connector (10)	To Receiver Antenna Connector, or attach Antenna in ramp operation.
Tone Select Switch (17)	Use to select tone frequency desired or for external modulation input (bench testing only).
MOD IN/EXT FREQ CTR IN Connector (18)	Use to apply external modulation to Signal Generator.
Master Mod Level Control	Set to CAL for 30% each tone selected or variable 0 to 60% modulation each tone.
Power Switch (25)	AC or Battery as desired.

6. COMM OPERATION (TRANSMITTER TESTS)

Monitor Meter & Switch (29) & (30)	10W or 100W - Use to measure transmitter power. CAUTION Observe power versus time limits of power meter (SECTION I).
Counter Mode Switch (3)	Hz, kHz - Use to measure Transmitter frequency - kHz, MHz, HF or VHF bands.
AVG/PEAK LOC XMTR Switch (12)	Peak - Use to indicate increase in power during modulation. Avg - Use to indicate Avg power only disregarding modulation.
MOD IN/EXT FREQ CTR IN Connector (18)	Attach Whip Antenna for COMM frequency measurements in portable operation.
Tone Select Switch (17)	To CTR IN position.
Power Switch (25)	AC or Battery as desired.
COMM XMTR IN Connector (11)	Connect to COMM Transmitter output.

Table 3-5 (Cont.)

THEORY OF OPERATION
NAV-402AP SECTION 4

1 Introduction.

1-1 This section gives information about the general theory of NAV-402AP circuit operation. Descriptions of Glide Slope, Localizer, COMM, Marker, and VOR Ground Station simulation signal generation are followed by theories of various systems and modules.

2 Marker Signal Generation. (ref. Simplified Overall Block Diagram)

2-1 The signal used to simulate the ILS Inner, Middle and Outer Marker Beacons consists of RF modulated by the appropriate audio tone. Typical RF frequency used by the NAV-402AP is 75 MHz.

2-2 Three Marker tones (400, 1300, and 3000 Hz) and 1020 Hz IDENT tone are generated on the Regulator-Timer Board (PC-2). Desired tone is selected by the Tone Select Switch (S7B). After passing through the Tone Select Switch, the selected tone is returned to PC-2 where it is converted from a square wave to a low distortion sine wave. This tone output is applied to the 30 Hz Sine Board (PC-4) via Tone Select Switch (S7A). On PC-4, the Marker tone may be combined with VOR, COMM, or Localizer modulation. In Marker mode, only Marker tone is present. Marker tone is passed through Frequency Mode Switch (S701) to Combination Sine Board (PC-3). On PC-3, the Marker tone is processed through a fixed or a variable level buffer amplifier.

2-3 The output of the buffer amp on PC-3 is applied to the Audio Signal Input of the Modulator and Power Amplifier (Assy. 6) and is used to modulate the RF output.

2-4 The Marker (or IDENT) tone output of the Combination Sine Board is also supplied through a separate buffer amp to the NAV Tones Output Connector (J1102). The Modulator and Power Amplifier provides a demodulated tone output which is available at the Signal Generator Demodulated Output Connector (J1104). This signal is 180^0 out of phase with the signal at the NAV Tones Output Connector.

3 COMM Signal Generation. (ref. Simplified Overall Block Diagram)

3-1 COMM signal generation is very similar to Marker signal generation. A different RF frequency is used (126.9 MHz typ.) and percent of RF modulation is different.

4 VOR Signal Generation. (ref. Simplified Overall Block Diagram)

4-1 The 30 Hz Variable and 30 Hz Reference signals are generated on Bearing Logic PC Board (PC-5). When a VOR bearing other than 0.0^0 is selected on Bearing Selector Switches (S2), the 30 Hz VAR signal is phase shifted with respect to the 30 Hz REF signal.

4-2 Two 30 Hz square-wave VAR signals 180^0 out of phase are routed to 30 Hz Sine Board (PC-4) via TO/FROM Switch (S3). The 30 Hz REF signal is applied to PC-4 directly. On PC-4, 30 Hz VAR and REF signals are processed into low distortion sine waves. The 30 Hz REF signal is applied to the 9960 Hz Oscillator circuit on PC-4 where it is used to phase lock and frequency modulate the 9960 Hz signal. This produces a 30 Hz FM modulated, 9960 Hz signal with a ±480 Hz deviation. The modulated 9960 Hz, and 30 Hz VAR signal are summed on PC-4. This composite VOR modulation signal is applied to Frequency MODE Switch (S701).

4-3 From the MODE Switch, the selected VOR modulation signal is applied to Combination Sine Board (PC-3). On PC-3, the VOR signal is processed through a fixed or a variable level buffer amplifier. The output of this buffer amp is applied to the Audio Signal Input of the Modulator and Power Amplifier (Assy. 6) where it is used to modulate the RF output.

4-4 The VOR modulation signal output of the Combination Sine Board is also supplied through a separate buffer amp to NAV Tones Output Connector (J102). The Modulator and Power Amplifier provides a demodulated tone output which is available at the signal Generator Demodulated Output Connector (J1104). This signal is 180^0 out of phase with the signal at the NAV Tones Output Connector.

5 Localizer and Glide Slope Signal Generation. (ref. Simplified Overall Block Diagram)

5-1 The 90 and 150 Hz tones of G/S and LOC are generated on Bearing Logic Board (PC-5). Circuitry of PC-5 allows the 150 Hz tone to be phase shifted with respect to the 90 Hz tone when the 90/150 Hz Variable Phase Switch (S9) is depressed and a bearing between 0.0^0 and 360^0 is selected on Bearing Select Switches (52). Amount of phase-shift is controlled by the Bearing Select Switches.

5-2 The 90 and 150 Hz square-wave outputs of PC-5 are applied to Combination Sine Board (PC-3). The 90 and 150 Hz square waves are converted to low distortion sine waves by sine synthesizing circuits on PC-3. The 90 Hz sine wave is applied to LOC and G/S Centering Controls (R4 & R6), Auto Pilot Sweep Generator Board, routed back to PC-3 where the signal is buffered, and applied to LOC & G/S DDM Switches (S8 & S5). The 150 Hz sine wave is applied directly to LOC & G/S DDM Switches via a buffer and the Auto Pilot Sweep Generator Board. The sweep output is applied to the LOC DDM Switch (S8).

5-3 The 90 and 150 Hz tones are summed at LOC and G/S DDM Switches and applied to 30 Hz Sine Board (PC-4). These LOC and G/S deviation signals are buffered on PC-4 and applied to Frequency Mode Switch (S701). The output of the MODE Switch is reapplied to PC-4 where it may be combined with MKR or IDENT tones (Localizer only). The G/S or LOC signal is then processed through a fixed or a variable buffer amplifier on PC-3.

5-4 Output of the buffer amp on PC-3 is applied to the Audio Signal Input of the Modulator and Power Amplifier (Assy. 6) where it is used to modulate the RF output.

5-5 The selected LOC or G/S deviation signal output of the combination Sine Board is also applied through a separate buffer amp to NAV Tones Output Connector (J1102). The Modulator P.A. provides a demodulated tone output which is available at Signal Generator Demodulated Output Connector (J1104). This signal is 180^0 out of phase with the signal at the NAV Tones Output Connector.

6 Bearing Generator. (ref. Simplified Bearing Generator Block Diagram)

6-1 VOR bearing is generated by a crystal-controlled digital counting system. All of the Circuitry (except the Bearing Select Switches) is located on Bearing Logic Board (PC-5). The 90 and 150 Hz LOC and G/S tones are also generated on the Bearing Logic Board as a side product of the bearing counters.

6-2 The clock signal is generated by crystal oscillator and a divider circuit on PC-5. Each clock pulse is equivalent to 0.1^0 of bearing. Clock pulses are applied to a counter that counts 3600 clock pulses and then resets to another count cycle. Gates and other logic circuit are used as count control for the counter. The output of the count control circuit is used as the 30 Hz reference square-wave output.

6-3 Four Bearing Select Switches (S2) select counts in the bearing counter corresponding to bearings from 000.1^0 to 359.9^0. Switch outputs are summed together via a common gate and applied as a start pulse to a counter.

6-4 When the start pulse is applied, the counter begins counting clock pulses at a 0.1^0 rate. After 1800 pulses have been counted, a counter control circuit stops the clock input and resets the counter. Output of the 180^0 counter system is a 30 Hz square wave. It is delayed from the start of the 30 Hz Reference signal by the number of degrees selected on the VOR BRG SEL Switches. Two outputs are available 180^0 apart to simulate a TO or FROM signal.

6-5 90 and 150 Hz square waves are generated by picking off counts from the bearing counter and adding further divisions. By this method, the 90 and 150 Hz frequencies are both crystal controlled and phase locked together.

6-6 The phase relationship between the 90 and 150 Hz tones can be varied by a special circuit. By using the reset from the 30 Hz VAR output signal, the 150 Hz tone can be stepped in 5^0 increments relative to the 90 Hz tone. VOR BRG SEL Switches are used to vary this phase relationship. Each 1^0 of bearing selected causes 5^0 of 150 Hz phase shift.

7 RF Section. (ref. Simplified RF Block Diagram)

7-1 All RF energy is generated by the Oscillator Assembly (Assy. 5). Within the Assembly are five crystal-controlled oscillators and one variable-frequency oscillator. The variable-frequency oscillator is band switched to cover 72-78 MHz and 107-156 MHz bands. Crystal frequencies supplied as standard are those authorized for ramp use by the FAA. Special frequencies can be substituted if required.

7-2 The oscillator output is fed through a buffer amplifier to the Modulator Power Amplifier Assembly (Assy. 6). Within the Modulator P.A. Assembly, the modulator and power amplifier are designed as a servo control system with the RF output controlled by the modulator.

7-3 All RF is amplified and fed through the power amplifier. There is no frequency change, except when operating in G/S mode. In G/S mode, the input carrier frequency is tripled in the output stage. All power amplifier circuits are broadtuned (except for the output stage). The amplifier output stage must be peaked for proper output by Front Panel Tune Control. Output from the final amplifier stage is fed directly to an Attenuator. The output of this attenuator is applied to a Diode Protect Block. This Block guards against damage to the Attenuator if a Transmitter is connected to the RF Output Connector.

7-4 RF at the attenuator input is detected and applied to the modulator input. Proper audio modulation is also applied to the Modulator and Power Amplifier after being buffered by an amplifier on Combination Sine PC Board (PC-3). The modulator collector-modulates the output stage of the power amplifier and requires a certain level of RF output to meet percent modulation requirements and RF level output of the output stage. Each of five modes of operation requires a different detected voltage. This voltage is determined by five gain switches in the modulator. These switches are driven by Mode Control Lines from Frequency Mode Switch (S701).

7-5 The modulator output to the power amplifier may be routed to the Monitor Meter by the Tune Switch (S11). The power amplifier is in perfect tune when the command voltage from the modulator is minimum. Therefore; when the Tune Switch is depressed, the Tune control is adjusted for a dip on the Monitor Meter.

7-6 The modulator output is also applied to a Tune Indicator (L-2). This indicator is illuminated whenever the modulator requires more detected RF voltage than the power amplifier is tuned for. When the power amplifier is adjusted, Tune Indicator is not illuminated.

7-7 Output of the modulator input amplifier is sampled to give a direct percent of modulation measurement, and a relative indication of the power amplifier's tune condition. This is possible because the percentage of modulation is directly controlled by the modulator. Output of the modulator input amplifier is applied to three places. It is applied to the Combination Sine Board (PC-3) where it is used in the Modulation Monitor circuit and the RF Level Meter circuit. The output is applied to Signal Generator Demodulated Output Connector (J1104). The output is applied to Bearing Check Board (PC-1). During VOR operation, the modulation is demodulated to determine VOR Relative Bearing Error in the RF output (at 90^0 bearing only).

7-8 A separate Dual Localizer Generator is turned on when AVG/PEAK-LOC XMTR Switch (S10) is in the PEAK-LOC position. The localizer generator frequencies are chosen to pair with the G/S XTL frequencies. The appropriate Localizer Generator receives power via the crystal HI/LO Switch (S12). Audio from the LOC DDM Switch (S5) is applied to the Generator for output modulation. The Generator output levels are approximately -15 to -20 dBm. This output is mixed with G/S XTL RF in the Diode Protect Block.

7-9 When Frequency Mode Switch (S701) is set to any Variable Frequency position, the Oscillator can be phase locked in 25 kHz increments. The phase-lock circuit is located on Phase Lock/ Power Monitor Assembly (Assy. 4). G/S is phase locked in 50 kHz increments.

7-10 In any mode but G/S, the reference frequency for phase lock is 250 Hz taken from the Counter. The oscillator frequency is taken from the ÷100 prescaler output and compared against the Course Variable Frequency Control (R9). When the output frequency closely equals the nearest 25 kHz step, the oscillator frequency is locked to that 25 kHz step.

7-11 In G/S mode, the reference frequency for phase lock is 166 Hz, taken from the Counter. The G/S signal phase locks in 50 kHz steps.

7-12 When phase-lock operation is not desired, Coarse Variable Frequency Control (R9) gives very large frequency changes for any rotation and Fine Variable Frequency Control (R10) gives small frequency changes.

7-13 A COMM Transmitter can be connected to XMTR IN Connector (J2). Signals at this connector are applied to a 25 dB pad. The output of the pad is applied to the power monitor portion of Assembly 4. A monitoring circuit drives the Monitor Meter in one of two ranges, 0 to 10 W, or 0 to 100 W. The output of the Power Monitor is applied to Rear Panel COMM Transmitter Demodulated Output Connector (J1103). This allows the COMM audio to be observed on an Oscilloscope or listened to via an External Amplifier.

7-14 At the XMTR IN Connector (J2), a small sample of the RF is applied to the Counter to measure COMM Transmitter frequencies. The frequency may be displayed in any counter mode except GEN and BRG (Bearing).

8 Counter Section. (ref. Simplified Counter Block Diagram)

8-1 All count inputs to the Counter (except Bearing Check) go through the Prescaler (Assy. 1). There are two inputs to the Prescaler. One from the Buffer Amplifier Assembly is used as the count for the internal generator. This count input is switched to pass through the Prescaler when Counter Mode Switch is in the GEN position.

8-2 The second input to the Counter is from Modulation Input/ External Frequency Counter Input Connector (J1). Also summed at this input is the XMTR IN Connector so that COMM transmitter frequencies may be measured. This count input is switched to pass through the Prescaler when Counter Mode Switch is in any position except GEN or BRG.

8-3 Both inputs to the Prescaler result in a direct count output and a ÷100 prescaled output. Both of these outputs are applied to the Counter (PC-6) where the direct output is counted in the Hz and first kHz positions of the Counter Mode Switch. The ÷100 output is counted in the GEN, second kHz, and MHz Counter Mode Switch positions.

8-4 With Counter Mode Switch in BRG position, duration of the count gate for the Counter is equal to the period of the 30 Hz Reference square wave from the Bearing Logic Board. The count input is from the Bearing Logic Board. This is the output of the 0.1^0 divider gated by VOR Bearing Select Switch output. A number of 0.1^0 clock pulses are applied to the counter that

8-4 (Cont.) correspond to the number of bearing degrees selected. The pulses are counted and displayed by the Counter with a resolution of 0.1^0.

8-5 Counter clock pulses are generated by a 10 MHz XTAL oscillator. This oscillator is located on the Bearing Check Board. The oscillator output frequency is divided to 100 kHz (÷100) and applied to the Counter PC Board where it is further divided to gate times of 0.1 and 1.0 sec.

8-6 In G/S mode, the 0.1 sec. time base is divided by three. This effectively multiplies the input count by three. (In G/S mode, the oscillator frequency is multiplied by three in the output stage of the Power Amplifier.) Since power amplifier input to the Counter is taken from the input of the power amplifier, that count must be tripled so that the Counter displays the G/S frequency output of the power amplifier.

8-7 The minimum recommended operating voltage for the NAV-401L Display is 160 Vdc.

9 Monitoring Section. (ref. Monitoring Section Block Diagram)

9-1 Three monitoring circuits are located on PC-3. Battery voltage is monitored by one of them.

9-2 The signal generator demodulated output from the power amplifier is applied to PC-3. The dc level of this signal is sampled and applied to the Meter for an RF level indication. The demodulated output is also processed to determine the accurate percentage of modulation. Two modulation ranges are available, 0 to 30% and 0 to 100%.

9-3 Two monitor circuits are located on the Bearing Check Board (PC-1). The Power Monitor Assembly (Assy. 4) is applied to PC-1 where it is processed and applied to the Meter in two ranges. The two ranges are, 0 to 10 W and 0 to 100 W.

9-4 The other monitor circuit on PC-1 is the Bearing Check system. The signal generator demodulated output from the power amplifier is further demodulated and broken down to the two 30 Hz signals during VOR operation. The phase relationship of the 30 Hz REF and 30 Hz VAR is compared at 90^0 and an error signal is produced. That error voltage is applied to the Monitor Meter for bearing check information.

10 Power Section. (ref. Power Section Block Diagram)

10-1 The NAV-401L is powered by either an external a c source (115 or 240 Vac.), or an internal 13.75 V NICAD battery pack.

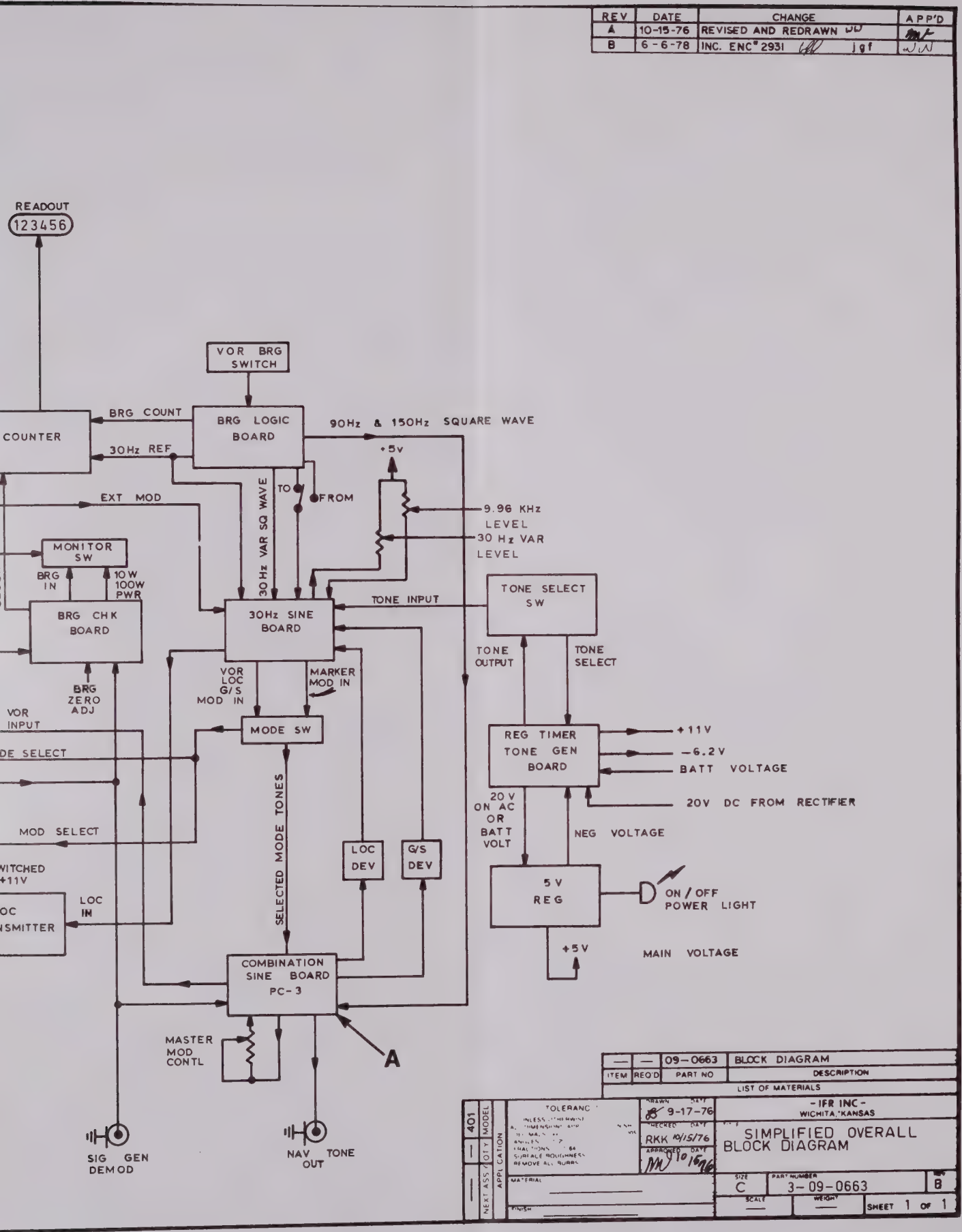
REV | DATE | CHANGE | APP'D
A | 10-15-76 | REVISED AND REDRAWN DD
B | 6-6-78 | INC. ENC# 2931 jgf
READOUT
123456
VOR BRG SWITCH
COUNTER
BRG COUNT
30Hz REF
BRG LOGIC BOARD
90Hz & 150Hz SQUARE WAVE
+5v
EXT MOD
TO
FROM
30Hz VAR SQ WAVE
9.96 KHz LEVEL
30 Hz VAR LEVEL
MONITOR SW
BRG IN
10W 100W PWR
BRG CHK BOARD
30Hz SINE BOARD
TONE INPUT
TONE SELECT SW
TONE OUTPUT
TONE SELECT
BRG ZERO ADJ
VOR LOC G/S MOD IN
MARKER MOD IN
VOR INPUT
MODE SW
REG TIMER TONE GEN BOARD
+11V
-6.2V
BATT VOLTAGE
20V DC FROM RECTIFIER
20V ON AC OR BATT VOLT
NEG VOLTAGE
MOD SELECT
SELECTED MODE TONES
LOC DEV
G/S DEV
WITCHED +11V
LOC IN
5V REG
ON / OFF POWER LIGHT
+5V
MAIN VOLTAGE
COMBINATION SINE BOARD PC-3
MASTER MOD CONTL
A
SIG GEN DEMOD
NAV TONE OUT
— | — | 09-0663 | BLOCK DIAGRAM
ITEM | REQ'D | PART NO | DESCRIPTION
LIST OF MATERIALS
401 | MODEL
— | QTY
NEXT ASS'Y | APPLICATION
TOLERANCE
DRAWN 9-17-76
CHECKED RKK 10/15/76
APPROVED 10/15/76
- IFR INC - WICHITA, KANSAS
SIMPLIFIED OVERALL BLOCK DIAGRAM
SIZE C
PART NUMBER 3-09-0663
REV B
SCALE
WEIGHT
SHEET 1 OF 1

Fig. 4-1

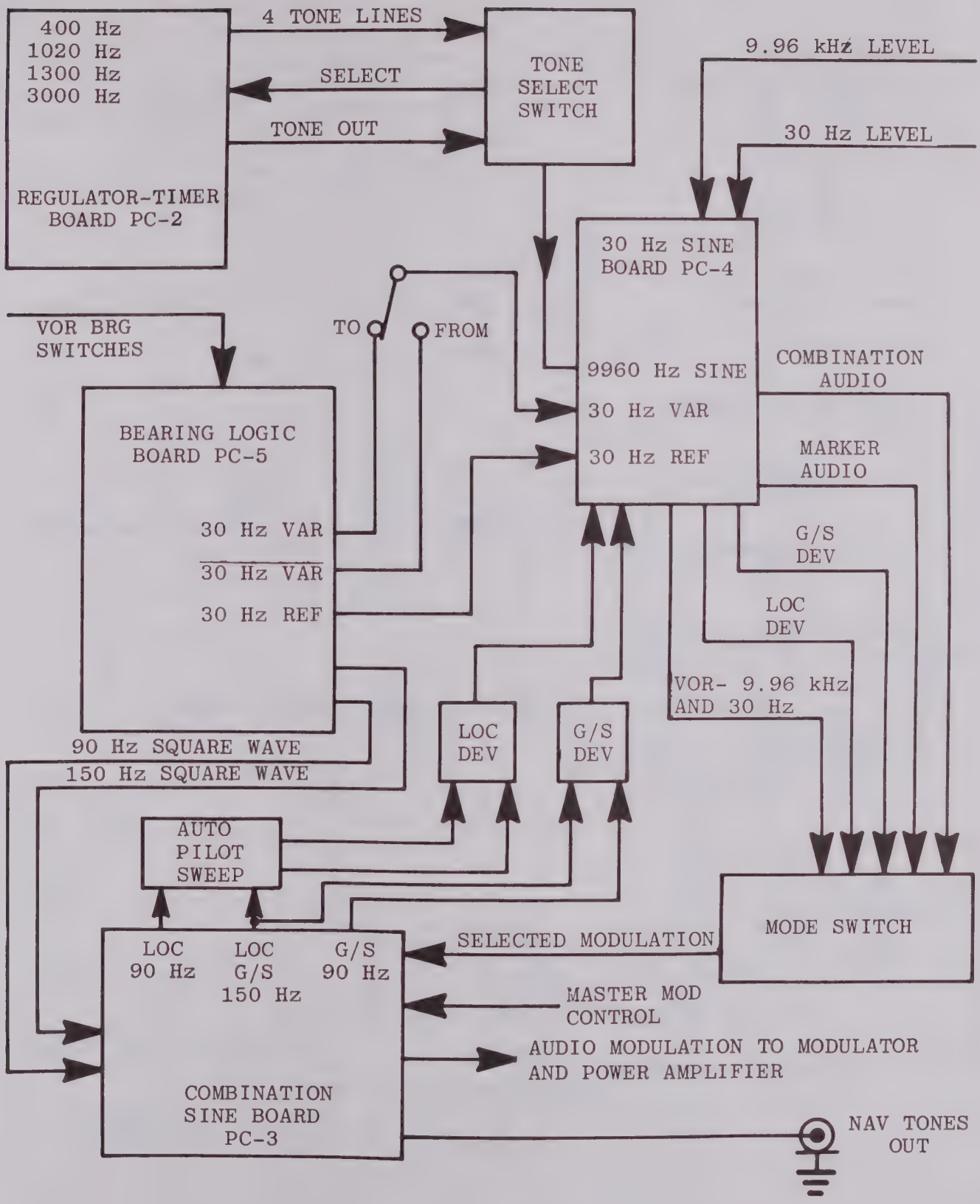

Fig. 4-2AP Simplified Tone Generator Block Diagram
NAV-402AP

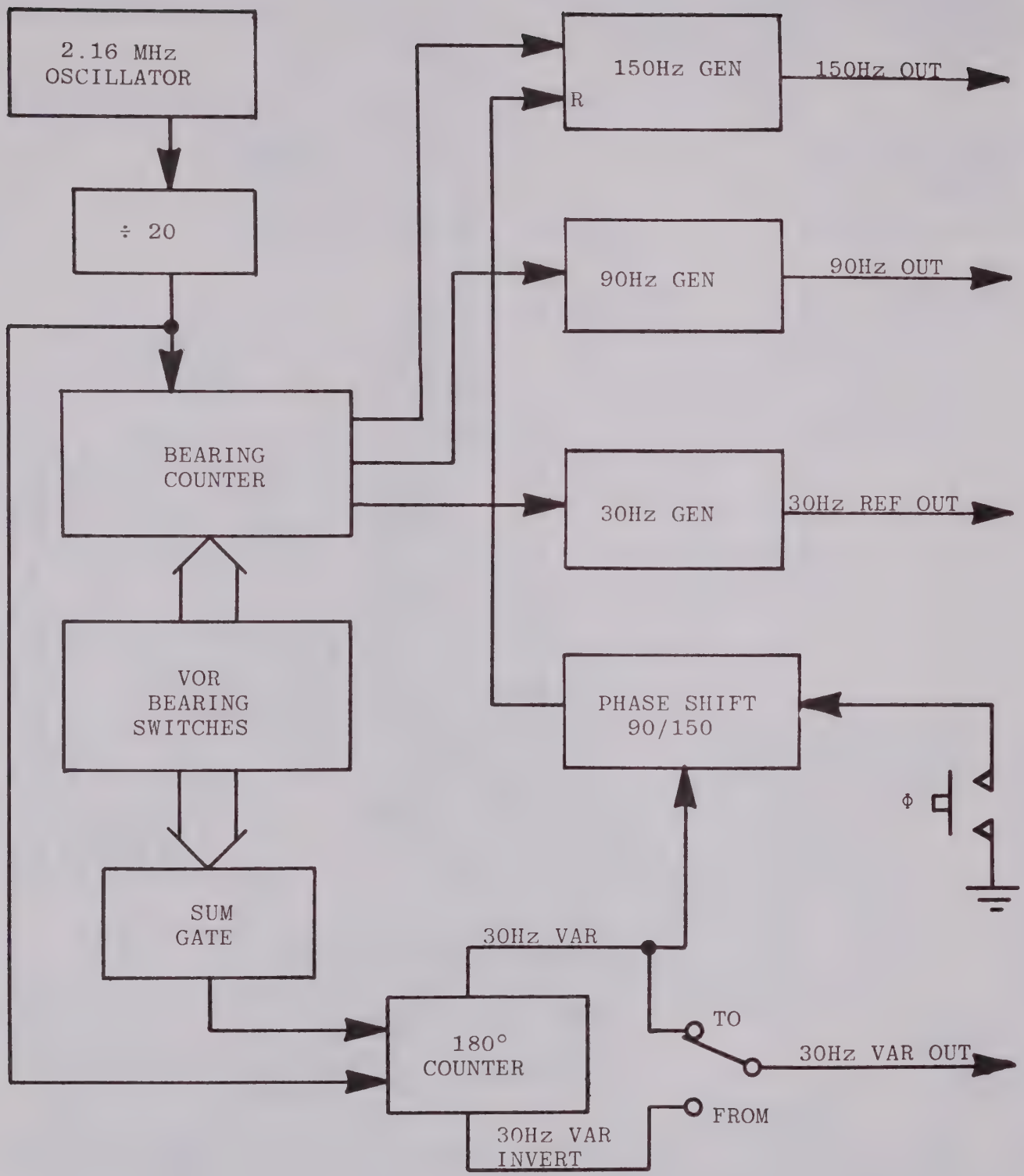

Fig. 4-3 Simplified Bearing Generator Block Diagram

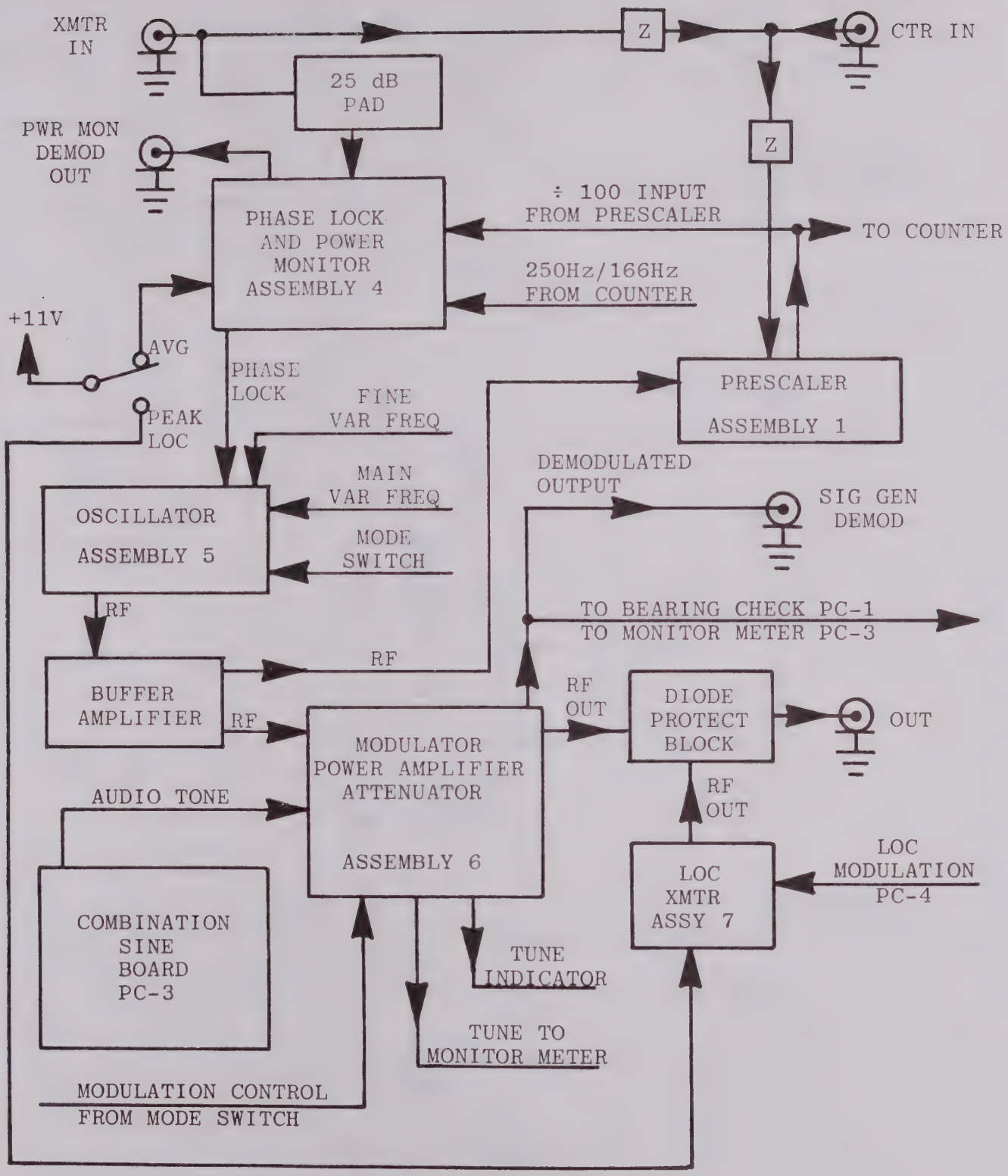

Fig. 4-4 Simplified RF Generator Block Diagram

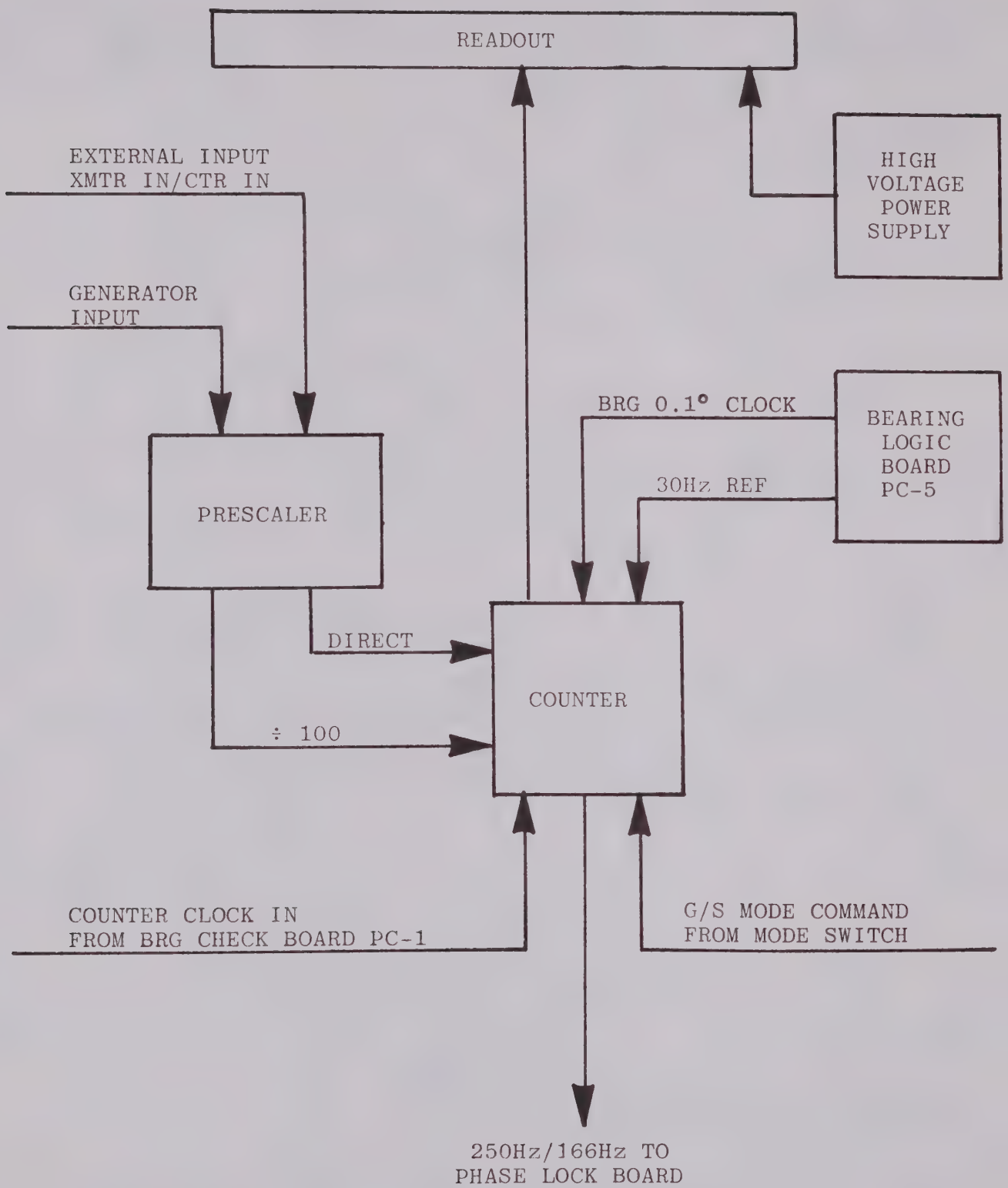

Fig. 4-5 Simplified Counter Block Diagram

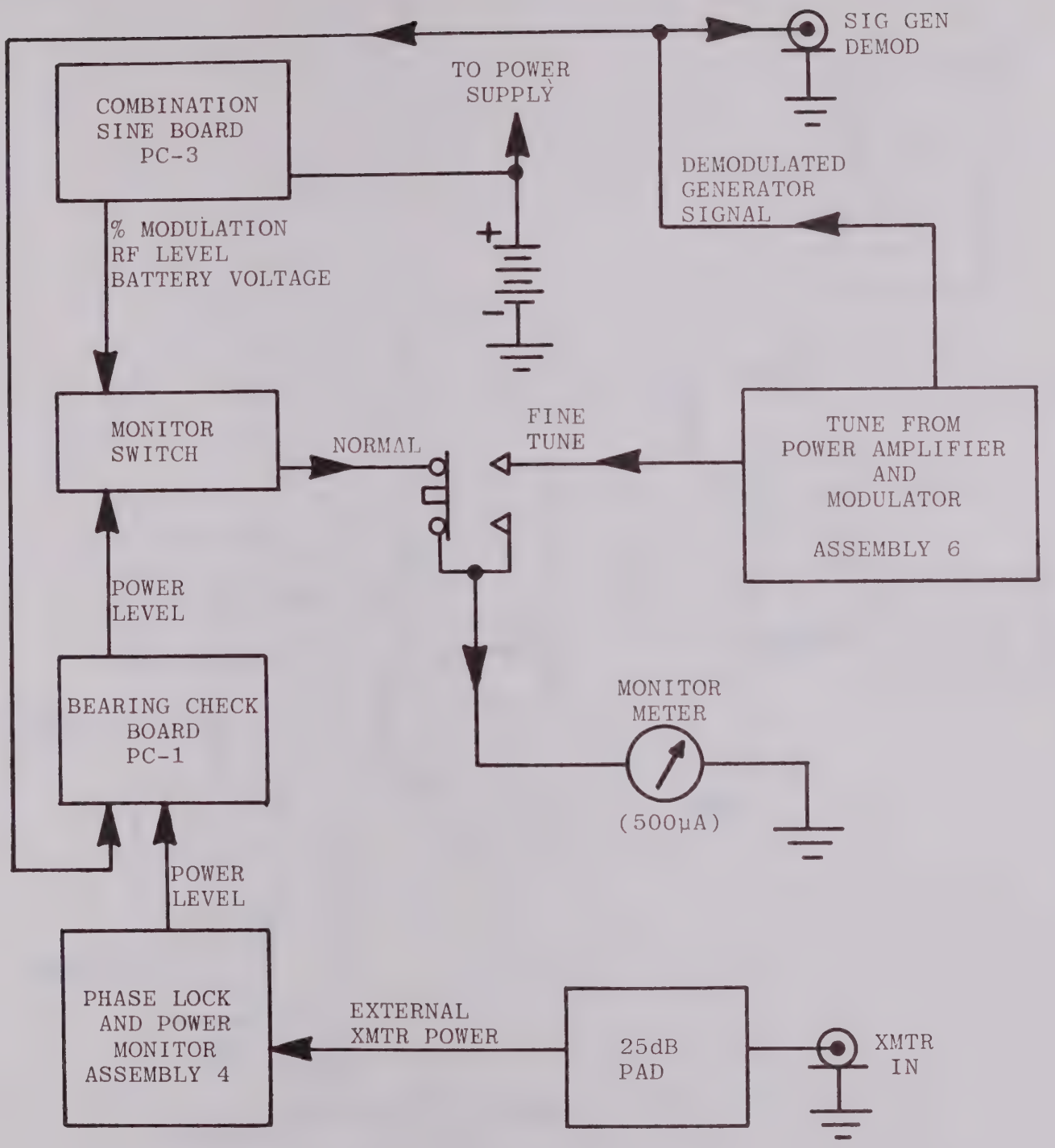

Fig. 4-6 Monitoring Section Block Diagram

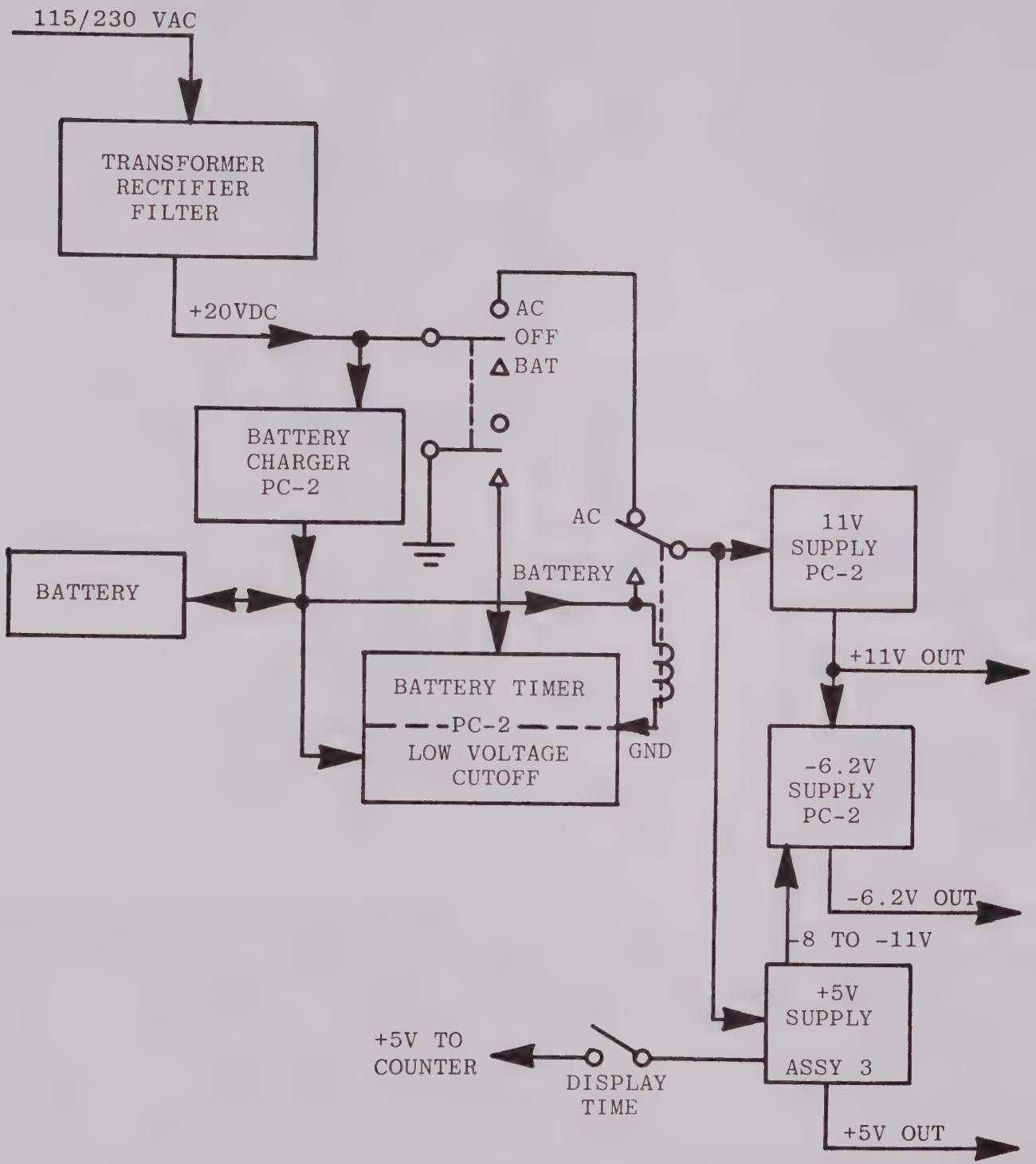

Fig. 4-7 Power Supply Block Diagram

TABLE OF CONTENTS
NAV-402AP

MAINTENANCE

SECTION 5 Performance Tests	Page
1 Introduction	5-1
2 NAV Tones Test	5-1
3 DDM Centering Test	5-3
4 Distortion Tests	5-4
5 Percent Modulation of Tones Test	5-5
6 Attenuator Output Level Tests	5-7AP
7 RF Frequency Test	5-8AP
8 Bearing Error Tests	5-9A AP
9 Bearing Check Test	5-10
10 Frequency Counter Tests	5-11
11 Power Meter Tests	5-11
12 Battery Voltage and Timer Tests	5-12
13 Spectral Purity Test	5-12
14 Localizer DDM Sweep Tests	5-13A AP
15 Performance Test Data Sheet	5-15

SECTION 6 Calibration Procedures	
1 Introduction	6-1
2 Equipment	6-1
3 Test Equipment Considerations	6-2
4 Calibration Procedures	6-2
4-2 Front Panel	6-2
4-3 Power Supply Voltages	6-3
4-4 Tones	6-3
4-5 Counter Clock Oscillator Frequency	6-7
4-6 Generator Output Frequencies	6-8
4-7 RF Output Level	6-11AP
4-8 Percent Modulation of Tones (Preferred)	6-11AP
MKR Tones	6-12
VOR Tones	6-12
LOC Modulation and Centering	6-13
G/S Modulation and Centering	6-13
COMM Modulation	6-14
4-9 Percent Modulation of Tones (Alternate)	6-14
MKR Tones	6-15
VOR Tones	6-16
LOC Modulation and Centering	6-17
G/S Modulation and Centering	6-17
COMM Modulation	6-17
4-10 Bearing Check Circuit	6-18
4-11 COMM Power Circuit	6-19
4-12 Battery Charger	6-20
4-13 Localizer DDM Sweep	6-20A AP
Calibration Data Sheet	6-21AP
5 Troubleshooting	6-23

MAINTENANCE TABLE OF CONTENTS

SECTION 7 I.C. Guide	page
7-1 Introduction	7-1
7-3 List of Symbols	7-1
7-5 Types of Logic Gates	7-1
7-6 Buffer Symbol and Truth Table	7-1
7-7 Inverter Symbol and Truth Table	7-1
7-8 OR Symbol and Truth Table	7-2
7-9 NOR Symbol and Truth Table	7-2
7-10 XOR Symbol and Truth Table	7-2
7-11 AND Symbol and Truth Table	7-3
7-12 NAND Symbol and Truth Table	7-3
7-13 Data Selector	7-3
Intergrated Circuit Guide Pin Outs and Truth Tables	
CA3130 Op Amp	7-5
CD4011AE COS/MOS Quad 2 Input NAND	7-5
CD4040AE Ripple Binary Counter/Divider	7-5
DD-700/DM8880 Decoder Driver	7-5
MC1027 AC-Coupled J-K Flip Flop	7-5
MC1666L Dual Clocked R-S Flip Flop	7-5
MC1692L Quad Line Receiver	7-6
MC1709CG/LM709H Op Amp	7-6
MC12013 Two-Modulus Prescaler	7-6
SN72558/MC1458 Op Amp	7-6
SN72741 Op Amp	7-6
7400 2 Input NAND Gate	7-6
SN7420 Quad Input NAND Gate	7-6
SN7430 8 Input Positive NAND Gate	7-6
7473 Dual J-K Flip Flop	7-7
7475 4-Bit Latch	7-7
7490 Decoder Counter	7-7
SN7492 Divide-by Twelve Counter	7-7
74S112 Dual J-K Flip Flop	7-7
CD4016 Quad CMOS Analog Switch	7-9AP
CD4025 Triple 3 Input NOR Gate	7-9AP
4027A Dual J-K Flip Flop	7-9AP
CD4029AE UP/DOWN Counter	7-9AP
CD4049AE Hex Buffer/Converter	7-9AP

LIST OF FIGURES AND TABLES
NAV-402AP

MAINTENANCE

SECTION 5 Performance Tests		Page
None		
SECTION 6 Calibration Procedures		
		6-5
Fig. 6-1	Phase Lock Pulse Adjustment	6-6
Fig. 6-2	9960 Hz Deviation Adjustment	6-23
Table 6-1	Printed Circuit Board Test Points	
Table 6-2	Troubleshooting Chart	
	Power Supply	6-25AP
	1020, 400, 1300. and 3000 Hz Tone Generator	6-25AP
	VOR BRG Generator 90 and 150 Hz Tones	6-26
	30 Hz REF and 30 Hz VAR Sine Output	6-27
	90 and 150 Hz Sine Output	6-28
	Tones to Mode Switch	6-29
	Tones Out	6-29
	Counter Clock Oscillator Frequency	6-29
	Generator Output Frequencies	6-30AP
	Phase Lock Selector	6-31
	RF Output Level	6-32
	Percent Modulation	6-32
	LOC and G/S Centering	6-33
	Bearing Check Circuit	6-33
	Power Meter	6-34
	Counter Operation	6-35
	Battery Charger	6-36
	Battery Timer	6-36
	LOC DDM Sweep Generator	6-37
SECTION 7 I.C. Guide		
None		

PERFORMANCE TESTS

NAV-401L SECTION 5

1 Introduction.

1-1 This section contains procedures necessary to determine overall performance of the NAV-401L. Each test should be done in sequence given. Refer to SECTION 6 (Calibration) for adjustment procedures governing any parameters which do not meet specifications. If a failure or operational problem is encountered, refer to SECTION 6 (Troubleshooting) for guidance in locating the problem.

1-2 To maintain accurate measurements throughout the procedures, the test set signal generator output should be accurately tuned. The Tune Control (6) should be fine tuned whenever frequency is changed by more than a few MHz in any band, or whenever a different frequency band is selected on the Frequency Mode Switch (1), or when the Attenuator (9) is changed in the output range from -30 to -7 dBm. Characters shown in parenthesis after 401L controls, connectors and indicators are referenced in SECTION 3.

2 NAV Tones Test.

2-1 Connect frequency Counter to NAV Tones Output Connector (A) on NAV-401L Rear Panel.

Set NAV-401L controls as indicated below:

Frequency MODE Switch (1) . . . . . .MKR XTL.
MASTER MOD Level Control (24) . . . . . .CAL.
Tone Select Switch (17) . . . . . .1020.

Frequency Counter should indicate from 1010 Hz to 1030 Hz.

2-2 Set NAV-401L controls as indicated below:

Tone Select Switch (17) . . . . . .400.

Frequency Counter should indicate from 396 to 404 Hz.

2-3 Set NAV-401L controls as indicated below:

Tone Select Switch (17) . . . . . .1300.

Frequency Counter should indicate from 1287 to 1313 Hz.

2-4 Set NAV-401L controls as indicated below:

Tone Select Switch (17). . . . . .3000.

Frequency Counter should indicate from 2970 to 3030 Hz.

2-5 Set NAV-401L controls as indicated below:

Tone Select Switch (17). . . . . .CTR IN.
Frequency MODE Switch (1). . . . . .VOR XTL.
9960 Hz REF Level Control (23) . . . . . .full ccw.
30 Hz VAR Level Control (22) . . . . . .full cw.

Frequency Counter should indicate 30 Hz.

2-6 Set NAV-401L controls as indicated below:

9960 Hz REF Level Control (23) . . . . . .full cw.
30 Hz VAR Level Control (22) . . . . . .full ccw.

Frequency Counter should indicate 9960 Hz (±100 Hz). 9960 Hz is frequency modulated. This may cause an erroneous reading in some counters.

2-7 Disconnect Frequency Counter and connect Oscilloscope to NAV Tones Demodulated Output Connector (A) on NAV-401L Rear Panel.

Adjust Oscilloscope Scope Trigger and Position controls to vertically center the display. Position the sweep trigger point at left edge of horizontal centerline (ref. Fig. 6-2A)

Set Oscilloscope Controls as indicated below:

Vertical . . . . . .200 mv/div. - Uncal.
Horizontal . . . . . .Delay Time Base: 10 µs/div.
Trigger. . . . . .Positive slope.

Check that deviation of expanded oscilloscope display (see Fig. 6-2B) corresponds to Δt=48.5 µs (±2.4 µs).

2-8 Disconnect Oscilloscope and connect Frequency Counter to NAV Tones Demodulated Output Connector (A) on NAV-401L Rear Panel.

2-8 (Cont.)
Set NAV-401L controls as indicated below:

Frequency MODE Switch (1) . . . . . LOC XTL.
G/S DDM Control (14). . . . . 0.
LOC DDM Control (21). . . . . 90 Hz.

Frequency Counter should indicate 90 Hz.

2-9 Set NAV-401L controls as indicated below:

LOC DDM Control (21) . . . . . 150 Hz.

Frequency Counter should indicate 150 Hz.

2-10 Disconnect Frequency Counter and connect an Oscilloscope to NAV Tones Demodulated Output Connector (A) on NAV-401L Rear Panel.

Set NAV-401L controls as indicated below:

LOC DDM Control (21) . . . . . 0.
VOR Bearing Select Switches (27) . . . . . 004.0.

Depress 90/150 Hz Variable Phase (ϕ) Switch (13) and note that relative amplitude of waveform peaks changes when the switch is depressed.

3 DDM Centering Tests.

3-1 Connect Digital Voltmeter (DVM) to Signal Generator Demodulated Output Connector (B) on NAV-401L Rear Panel.

Set NAV-401L controls as indicated below:

Tone Select Switch (17) . . . . . .CTR IN.
LOC DDM Control (21). . . . . .0.
Frequency MODE Switch (1) . . . . . LOC XTL.
G/S DDM Control (14) . . . . . 150 Hz.
MASTER MOD Level Control (24) . . . . . CAL.

Note DVM indication.

3-2 Set NAV-401L controls as indicated below:

G/S DDM Control (14) . . . . . 90 Hz.

3-2 (Cont.)
DVM indication should be within ±2 mV of indication noted in paragraph 3-1. Note DVM indication.

3-3 Set NAV-401L controls as indicated below:

G/S DDM Control (14) . . . . . .0.
Frequency MODE Switch (1). . . . . G/S XTL.
LOC DDM Control (21) . . . . . 150 Hz.

Note DVM indication.

3-4 Set NAV-401L controls as indicated below:

LOC DDM Control (21) . . . . . .90 Hz.

DVM indication should be within ±2 mVac of indication noted in paragraph 3-3.

4 Distortion Tests.

4-1 Disconnect DVM from NAV-401L.

Connect Low Pass Filter input (as shown in Fig. 1-1; or IFR P/N 1-00-166) to NAV Tones Demodulated Output Connector (A) on NAV-401L Rear Panel.

Connect Audio Distortion Meter to the output of Low Pass Filter.

Set NAV-401L controls as indicated below:

MASTER MOD Level Control (24) . . . . . .CAL.
Frequency MODE Switch (1) . . . . . .MKR XTL.
Tone Select Switch (17) . . . . . .1020.

Distortion Meter should indicate less than 1% harmonic distortion.

4-2 Set Tone Select Switch (17) to 400, 1300, and 3000 positions and verify that in each case, the meter indicates less than 1% harmonic distortion.

4-3 Set NAV-401L controls as indicated below:

Frequency MODE Switch (1)	VOR XTL.
9960 Hz REF Level Control (23)	full ccw.
30 Hz VAR Level Control (22)	full cw.
Tone Select Switch (17)	CTR IN.

Distortion Meter should indicate less than 0.65% harmonic distortion.

4-4 Set NAV-401L controls as indicated below:

Frequency MODE Switch (1)	LOC XTL.
G/S DDM Control (14)	0.
LOC DDM Control (21)	90.

Distortion Meter should indicate less than 0.65% harmonic distortion.

4-5 Set NAV-401L controls as indicated below:

LOC DDM Control (21)	150.

Distortion Meter should indicate less than 0.65% harmonic distortion.

5 Percent Modulation of Tones Tests.

5-1 Set NAV-401L controls as indicated below:

MASTER MOD Level Control (24)	CAL.
Frequency MODE Switch (1)	MKR XTL.
Monitor Meter Function Switch (30)	100%.
Tone Select Switch (17)	1020.

Connect Modulation Meter to RF Output Connector (10) on the Front Panel of the NAV-401L.

Modulation Meter should indicate 95% (±5%). Check that NAV-401L MONITOR Meter (29) indicates approximately 95% modulation.

5-2 Set NAV-401L controls as indicated below:

Frequency MODE Switch (1)	VOR XTL.
30 Hz VAR Level Control (22)	full ccw.
9960 Hz REF Level Control (23)	full ccw.

5-2 (Cont.)
Modulation Meter should indicate 30% (±2%). Check that NAV-401L MONITOR Meter (29) indicates approximately 30% modulation.

5-3 Set NAV-401L controls as indicated below:

Tone Select Switch (17) . . . . . MOD IN.
30 Hz VAR Level Control (22). . . . . full cw.

Modulation Meter should indicate 30% (±2%).

5-4 Set NAV-401L controls as indicated below:

30 Hz VAR Level Control (22) . . . . . .full ccw.
9960 Hz REF Level Control (23) . . . . . .full cw.

Modulation Meter should indicate 30% (±2%).

5-5 Set NAV-401L controls as indicated below:

Frequency MODE Switch (1) . . . . . LOC XTL.
LOC DDM Control (21). . . . . 0.
G/S DDM Control (14). . . . . 90.
Monitor Meter Function Switch (30). . . . . 30%.

Modulation Meter should indicate 20% (±2%). Check that NAV-401L MONITOR Meter (29) indicates approximately 20% modulation.

5-6 Set NAV-401L controls as indicated below:

G/S DDM Control (14) . . . . . .150.

Modulation Meter should indicate 20% (±2%).

5-7 Set NAV-401L controls as indicated below:

LOC DDM Control (21) . . . . . .90.
Tone Select Switch (17). . . . . .1020.

Modulation Meter should indicate 30% (±2%).

5-8 Set NAV-402AP controls as indicated below:

G/S DDM Control (14)	.0.
Monitor Meter Function Switch (30)	.100%.
Frequency MODE Switch (1)	.G/S XTL.

Modulation Meter should indicate 40% (±2%). Check that NAV-402AP Monitor Meter (29) indicates approximately 40% modulation.

5-9 Set NAV-402AP controls as indicated below:

LOC DDM Control (21)	.150.

Modulation Meter should indicate 40% (±2%).

5-10 Set NAV-402AP controls as indicated below:

Frequency MODE Switch (1)	.COMM XTL.

Modulation Meter should indicate 30% (±2%).

6 Attenuator Output Level Tests.

6-1 Set NAV-402AP controls as indicated below:

MASTER MOD Level Control (24)	.full ccw, out of detent.
Output Attenuator (9)	.-30.0 dBm.
Crystal HI/LO Switch (2AP)	.LO.

Connect Power Meter to RF Output Connector (10).

Note output power level at each of the 5 crystal controlled frequencies as selected by the Frequency MODE Switch (1). Power Meter should indicate -30 dBm (±2 dBm) at each switch setting.

6-2 Set NAV-402AP controls as indicated below:

Frequency MODE Switch (1)	.COMM VAR.
Variable Frequency Controls (5)	.144.0 MHz (as displayed on Counter {31}).

Power Meter should indicate -30 dBm (±2 dBm).

6-3 Set NAV-402AP controls as indicated below:

Frequency MODE Switch (1)	VOR XTL.
Output Attenuator (9)	-25 dBm.
	-20 dBm.
	-15 dBm.

Power Meter indication should agree with each Attenuator setting to within ±0.5 dBm.

6-4 Set NAV-402AP controls as indicated below:

Crystal HI/LO Switch (2AP)	HI.
Output Attenuator (9)	-50 dBm.
AVG/PEAK LOC XMTR ON Switch (12)	PEAK LOC.
Frequency MODE Switch (1)	G/S XTL.

Power Meter should indicate from -15 to -20 dBm.

6-4AP Set NAV-402AP controls as indicated below:

Crystal HI/LO Switch (2AP)	LO.

Power Meter should indicate from -15 to -20 dBm.

6-5 Set NAV-402AP controls as indicated below:

Monitor Meter Function Switch (30)	RF.

Tune transmitter output. Check that MONITOR Meter (29) needle is centered when transmitter is tuned.

7 RF Frequency Tests.

7-1 Set NAV-402AP controls as indicated below:

MASTER MOD Level Control (24)	full ccw, not detented
Frequency MODE Switch (1)	VOR VAR.

Connect External Frequency Counter to NAV-402AP RF Output Connector (10).

Adjust Coarse Variable Frequency Control for a phase-locked output frequency indication on NAV-402AP of 110.000 MHz. External Frequency Counter should indicate 110.000 MHz. (±2.2 kHz).

7-2 Set NAV-402AP controls as indicated below:

Counter Mode Switch (3). . . . . GEN.
Frequency MODE Switch (1). . . . . MKR XTL.
Crystal HI/LO Switch (2AP) . . . . . LO.

External Counter should display LO Marker Crystal frequency, ±3 kHz.

7-3 Set NAV-402AP controls as indicated below:

Frequency MODE Switch (1). . . . . VOR XTL.
Crystal HI/LO Switch (2AP) . . . . . LO.

External Counter should display LO VOR Crystal frequency, ±5 kHz.

7-3AP Set NAV-402AP controls as indicated below:

Crystal HI/LO Switch (2AP) . . . . . HI.

External Counter should display HI VOR Crystal frequency, ±5 kHz.

7-4 Set NAV-402AP controls as indicated below:

Frequency MODE Switch (1). . . . . LOC XTL.

External Counter should display Localizer Crystal frequency, ±5 kHz.

7-5 Set NAV-402AP controls as indicated below:

Frequency MODE Switch (1). . . . . G/S XTL.
Crystal HI/LO Switch (2AP) . . . . . HI.

External Counter should display HI Glide Slope Crystal frequency, ±16 kHz.

7-5AP Set NAV-402AP controls as indicated below:

Crystal HI/LO Switch (2AP) . . . . . LO.

External Counter should display LO Glide Slope Crystal frequency, ±16 kHz.

7-6 Set NAV-402AP controls as indicated below:

Frequency MODE Switch (1). . . . . COMM XTL.

External Counter should display COMM Crystal frequency, ±6 kHz.

7-6 (Cont'd)
External Counter should display COMM Crystal frequency, ±6 kHz.

7-7 Set NAV-402AP controls as indicated below:

Crystal HI/LO Switch (2AP)	HI.
Output Attenuator (9)	-50 dBm.
Frequency MODE Switch (1)	G/S XTL.
AVG/PEAK LOC XMTR ON Switch (12)	PEAK LOC.

External counter should display HI LOC Transmitter crystal frequency, ±5 kHz.

7-7AP Set NAV-402AP controls as indicated below:

Crystal HI/LO Switch (2AP)	LO.

External Counter should display LO LOC Transmitter crystal frequency, ±5 kHz.

8 Bearing Error Tests. (using IFR CS-360 or CS-360D)

8-1 Set NAV-402AP controls as indicated below:

Frequency MODE Switch (1)	VOR XTL.
MASTER MOD Level Control (24)	CAL.
Tone Select Switch (17)	CTR IN.
9960 Hz REF Level Control (23)	full cw.
30 Hz VAR Level Control (22)	full cw.

Set Controls on the CS-360(D) for RF input and 90° bearings.

Connect NAV-402AP RF Output Connector (10) to CS-360(D) RF Input Connector.

Set RF input level to CS-360(D) with NAV-402AP Attenuator Control (9).

8-1 (Cont.d)

Connect NAV-401L RF Output Connector (10) to CS-360(D) RF Input Connector.

Set RF input level to CS-360(D) with NAV-401L Attenuator Control (9).

Set NAV-401L controls as indicated below:

VOR Bearing TO/FROM Switch (28) . . . . . TO.
VOR Bearing Select Switch (27) . . . . . 090.0.

CS-360(D) should indicate a bearing error of less than ±0.1°.

8-2 Set NAV-401L controls as indicated below:

VOR Bearing TO/FROM Switch (28) . . . . . FROM.

CS-360(D) should indicate a bearing error of less than ±0.1°.

8-3 Set NAV-401L controls as indicated below:

VOR Bearing Select Switches (27) . . . . . 000.0.

Set CS-360(D) for a 0° bearing. CS-360(D) should indicate a bearing error of less than ±0.1°.

8-4 Set NAV-401L controls as indicated below:

VOR Bearing TO/FROM Switch (28) . . . . . TO.

CS-360(D) should indicate a bearing error of less than ±0.1°.

8-5 Disconnect the CS-360(D).

Select each digit of each decade on the VOR Bearing Select Switches (27), one digit at a time. Note that Digital Display (31) indicates the bearing selected on VOR Bearing Select Switches (27). Any Select Switch setting greater than 360° is invalid and the display should continue to indicate 360.0°.

9 Bearing Check Test.

9-1 Set NAV-401L controls as indicated below:

VOR Bearing TO/FROM Switch (28) . . . . . FROM.
VOR Bearing Select Switches (27) . . . . . 090.0.
Monitor Meter Function Switch (30) . . . . BRG.
Counter Mode Switch (3) . . . . . BRG.

9-1 (Cont.)
The Monitor Meter needle should deflect to mid-scale.

10 Frequency Counter Tests.

10-1 Set NAV-401L controls as indicated below:

Tone Select Switch (17) . . . . . CTR IN.
Counter Mode Switch (3) . . . . . Hz.

Connect Signal Generator to MOD IN/CTR IN Connector (18).

Adjust Signal Generator Output of 0 dBm.

Vary Signal Generator Output Frequency from 1 MHz to 10 MHz. NAV-401L Digital Display (31) should display Signal Generator Frequency to within ±0.001%.

10-2 Set NAV-401L controls as indicated below:

Counter Mode Switch (3) . . . . . MHz.

Vary Signal Generator Output Frequency from 10 MHz to 300 MHz. NAV-401L Digital Display (31) should display Signal Generator Frequency to within ±0.001%.

11 Power Meter Tests.

11-1 Set NAV-401L controls as indicated below:

Monitor Meter Function Switch (30) . . . . . 100W.

Apply 30 to 50 Watts of unmodulated RF power through an accurate thru-line Power Meter to NAV-401L COMM Transmitter Input Connector (11).

The difference between the Monitor Meter indication and the Power Meter indication should be less than (±3% of full meter scale)+(±5% of Monitor Meter reading).

11-2 Apply 4 to 8 Watts of unmodulated RF power through an accurate thru-line Power Meter to NAV-401L COMM Transmitter Input Connector (11).

Set NAV-401L controls as indicated below:

Monitor Meter Function Switch (30) . . . . . .10W.

11-2 (Cont.)
The difference between the Monitor Meter indication and the Power Meter indication should be less than (±3% of full meter scale)+(±5% of Monitor Meter reading).

12 Battery Voltage and Timer Tests.

12-1 Set NAV-401L controls as indicated below:

Monitor Meter Function Switch (30) . . . . . BAT.

Monitor Meter (29) should indicate battery voltage on 0-30% scale. For a fully charged battery, the Monitor Meter should indicate 15 V. Voltage readings below 12 V indicate a discharged battery.

12-2 Set NAV-401L controls as indicated below:

AC/Battery Power Switch (25) . . . . . BAT.

Start Stopwatch to check that battery timer turns NAV-401L OFF after 6 to 10 minutes.

13 Spectral Purity Test.

13-1 Spectral Purity Test is an optional procedure that is to be performed if repairs or internal adjustments, other than oscillator frequency adjustments, are made on the Oscillator, Buffer Amplifier, or Transmitter.

Set NAV-401L controls as indicated below:

MASTER MOD Level Control (24) . . . . . .full ccw, not detented.
Output Attenuator Control (9) . . . . . .-30 dBm.

Connect Spectrum Analyzer to RF Output Connector (10).

Set Spectrum Analyzer controls for a 10 kHz/div. frequency span, and check that harmonics over entire frequency range of each band of the test set are greater than 20 dB below the carrier level.

13-2 Set Spectrum Analyzer controls for a 300 Hz resolution bandwidth. Use 10 Hz filter.

Set NAV-401L controls as indicated below:

Frequency MODE Switch (1) . . . . . VOR XTL.

Check that close-in noise is greater than 68 dB below carrier level, beyond ±20 kHz of carrier frequency.

Check that broadband noise, beyond ±50 kHz of carrier frequency, is greater than 70 dB below carrier level.

13-3 Set NAV-401L controls as indicated below:

Frequency MODE Switch (1) . . . . . G/S XTL.

Check that close-in noise is greater then 62 dB below carrier level, beyond ±20 kHz of the center frequency.

Check that broadband noise, beyond ±50 kHz of carrier frequency, is greater than 70 dB below carrier level.

13-4 Set NAV-401L controls as indicated below:

Frequency MODE Switch (1) . . . . . VOR VAR.
Fine Variable Frequency Control (5) . . . . . full ccw, detent.
Coarse Variable Frequency Control (5) . . . . . 110.000 MHz.

Check that 25 kHz phase lock loop reference noise, or 10 to 30 kHz switching regulator noise is greater then 55 dB below carrier level.

14 Localizer DDM Sweep Tests.

14-1 Set NAV-402AP controls as indicated below:

Frequency MODE Switch (1)	LOC XTL.
Tone Select Switch (17)	CTR IN.
LOC DDM Control (21)	arrow.
LOC VAR DDM/DDM Sweep Amplitude Control (20AP)	full cw (30 µA).
MASTER MOD Level Control (24)	CAL.
Localizer DDM Sweep Switch (32AP)	AL.
G/S DDM Control (14)	150.

Connect oscilloscope to Signal Generator Demod Out connector (B), and set Oscilloscope Vertical Sensitivity to 0.1 V/div. Set Oscilloscope controls to display a signal peak.

Set the NAV-402AP controls as indicated below:

Localizer DDM Sweep Switch (32AP)	S.

Check that the peak amplitude of the displayed signal sweeps approximately 0.15 V.

14-2 Set NAV-402AP controls as indicated below:

G/S DDM Control (14)	90.

Check that the peak amplitude of the displayed signal sweeps approximately 0.15 V.

15 PERFORMANCE TEST DATA SHEET

2 NAV TONES

2-1	1020 Hz MKR	1010 Hz	_____	1030 Hz
2-2	400 Hz MKR	396 Hz	_____	404 Hz
2-3	1300 Hz MKR	1287 Hz	_____	1313 Hz
2-4	3000 Hz MKR	2970 Hz	_____	3030 Hz
2-5	30 Hz VOR VAR		_____	30 Hz (±0.02%)
2-6	9960 Hz VOR		_____	9960 Hz (±100 Hz)
2-7	VOR FM Deviation (Δt)	46.1 µs	_____	50.9 µs
2-8	90 Hz LOC-G/S		_____	90 Hz (±0.02%)
2-9	150 Hz LOC-G/S		_____	150 Hz (±0.02%)
2-10	90/150 Hz Phase Shift		_____	✓

3 DDM CENTERING

3-1	150 Hz LOC Demod	_____	
3-2	90 Hz LOC Demod (Ref to 3-1)	_____	±2 mVac of above
3-3	150 Hz G/S Demod	_____	
3-4	90 Hz G/S Demod (Ref to 3-3)	_____	±2 mVac of above

4 DISTORTION (Harmonic)

4-1	1020 Hz	_____	<1%
4-2	400 Hz	_____	<1%
	1300 Hz	_____	<1%
	3000 Hz	_____	<1%
4-3	30 Hz VAR	_____	<0.65%
4-4	90 Hz	_____	<0.65%
4-5	150 Hz	_____	<0.65%

5 PERCENT MODULATION OF TONES

5-1	1020 Hz MKR XTL	90%	_____	100%
5-2	1020 Hz VAR VOR	28%	_____	32%
5-3	30 Hz VAR VOR	28%	_____	32%
5-4	9960 Hz VOR	28%	_____	32%
5-5	90 Hz LOC	18%	_____	22%
5-6	150 Hz LOC	18%	_____	22%
5-7	1020 Hz LOC	28%	_____	32%
5-8	90 Hz G/S	38%	_____	42%
5-9	150 Hz G/S	38%	_____	42%
5-10	1020 Hz COMM	28%	_____	32%

15 PERFORMANCE TEST DATA SHEET

6 ATTENUATOR OUTPUT LEVEL

6-1	MKR XTL	-28 dBm	_____	-32 dBm
	VOR XTL	-28 dBm	_____	-32 dBm
	LOC XTL	-28 dBm	_____	-32 dBm
	G/S XTL	-28 dBm	_____	-32 dBm
	COMM XTL	-28 dBm	_____	-32 dBm
6-2	COMM VAR (144.0 MHz)	-28 dBm	_____	-32 dBm
6-3	VOR XTL -25 dBm (Ref Atten Corr Chart)		_____	(±0.5 dBm)
	-20 dBm (Ref Atten Corr Chart)		_____	(±0.5 dBm)
	-15 dBm (Ref Atten Corr Chart)		_____	(±0.5 dBm)
6-4	LOC Transmitter HI	-15 dBm	_____	-20 dBm
6-4AP	LOC Transmitter LO	-15 dBm	_____	-20 dBm
6-5	Monitor Meter Centering		_____	✓

7 RF FREQUENCY

7-1	VOR VAR (110.000 MHz)	_____	±2.2 kHz
7-2	MKR XTL	_____	±3 kHz
7-3	VOR XTL LO	_____	±5 kHz
7-3AP	VOR XTL HI	_____	±5 kHz
7-4	LOC XTL	_____	±5 kHz
7-5	G/S XTL HI	_____	±16 kHz
7-5AP	G/S XTL LO	_____	±16 kHz
7-6	COMM XTL	_____	±6 kHz
7-7	LOC XMTR XTAL HI	_____	±5 kHz
7-7AP	LOC XMTR XTAL LO	_____	±5 kHz

8 BEARING ERROR (With IFR CS-360D)

8-1	90° TO	_____	<±0.1°
8-2	90° FROM	_____	<±0.1°
8-3	0° FROM	_____	<±0.1°
8-4	0° TO	_____	<±0.1°

9 BEARING CHECK

9-1	90° FROM, Mid-scale deflection	_____	✓

10 FREQUENCY COUNTER

10-1	Max Dev from Gen Frequency	_____	<±0.001%
10-2	Max Dev from Gen Frequency	_____	<±0.001%

11 POWER METER

11-1	30-50 W Input	_____	(±3% of full meter scale) + (±5% of meter reading)

15 PERFORMANCE TEST DATA SHEET

11-2	4-8 W Input		_____	(±3% of full meter scale) + (±5% of meter reading)

12 BATTERY VOLTAGE AND TIMER

12-1	Battery Voltage	+12V	_____	+15V
12-2	Timer Operation	6 min	_____	10 min

13 SPECTRAL PURITY

13-1	Harmonics	_____	>20 dBc
13-2	VOR XTL, Close-in Noise	_____	>68 dBc
	VOR XTL, Broadband Noise	_____	>70 dBc
13-3	G/S XTL, Close-in Noise	_____	>62 dBc
	G/S XTL, Broadband Noise	_____	>70 dBc
13-4	PLL or Switching Regulator Noise	_____	>55 dBc

14 LOCALIZER DDM SWEEP TEST

14-1	Peak Amplitude Sweep	_____	0.15 V (Approx.)
14-2	Peak Amplitude Sweep	_____	0.15 V (Approx.)

CALIBRATION PROCEDURES

NAV-401L SECTION 6

EFFECTIVE S/N 1636 AND AFTER (unless otherwise specified)

1 Introduction

1-1 Follow calibration procedures in the order as sequenced. Use individual procedures to calibrate individual systems only if effecting circuitry has been calibrated or has been verified by the appropriate Performance Evaluation Procedures in Section 5.

1-2 Unless otherwise specified, verify the results of each procedure and take corrective action whenever a calibration requirement is not met. "Corrective Action" can mean either troubleshooting the unit to determine component failure and replacing that component or making a mechanical or electrical repair to restore normal operation.

1-3 Results of the calibration procedures may be recorded in the Calibration Data Sheet at the end of the Calibration Procedures. The recorded results can be used for comparison in future calibrations, troubleshooting and for references after repair and inspection.

1-4 For locations of calibration test points and components, refer to Sections 8 and 10.

2 Equipment Considerations

2-1 For best results, calibrate the set using environmental conditions as close as possible to those of normal operating location.

2-2 Calibration procedures are performed with equipment covers removed and standard ac power applied, except as noted.

WARNING

* Turn power switch "OFF" and remove external power connections prior to removing equipment covers.

* Do not interrupt internal or external grounding conductors.

* Remove power before removing or installing any component.

* Contact with many points may result in personal injury. Only qualified personnel should attempt calibration, maintenance or repair.

3 Test Equipment Considerations

3-1 Each calibration procedure specifies required test equipment.

3-2 When using PC Board Extenders, support PC board with a brace of nonconductive material to assure proper positioning and electrical contact.

4 Calibration Procedures

4-1 To maintain accurate measurements throughout the procedures, the test set signal generator output should be accurately tuned. The Tune Control (7) on the front panel should be fine tuned whenever the frequency is changed by more than a few megahertz in any band, whenever a different frequency band is selected on the Frequency Mode Switch (1), or when the attenuator is changed in the output range of -30 dBm to -7 dBm.

4-2 FRONT PANEL

DESCRIPTION: The following procedures are not intended to be daily tests, but to be used in a regularly scheduled preventive maintenance program.

4-3 POWER SUPPLY VOLTAGES

DESCRIPTION: This procedure checks the output voltage of the 11 volt and 5 volt power supplies.

TEST EQUIPMENT: Digital Voltmeter

PROCEDURES:

1. Connect digital voltmeter to terminal 3 of PC-1.
2. Adjust 11 volt regulator adjustment (R210) on PC-2 to obtain a voltmeter indication of +11.00 V (±0.10 V).
3. Connect voltmeter to terminal F of PC-1.
4. Adjust 5 volt regulator adjustment (R1158) on 5 Volt Regulator Board to obtain a voltmeter indication of +5.00 V (+4.90 to +5.00 V).
5. Connect voltmeter to terminal 2 of PC-1. Voltmeter should indicate -6.20 V (±0.20 V).

4-4 TONES

DESCRIPTION: This procedure is used to adjust frequency and harmonic distortion.

TEST EQUIPMEMT: Harmonic Distortion Meter
Frequency Counter
Oscilloscope (dual trace)

PROCEDURE: 1020 Hz, 400 Hz, 1300 Hz, 3000 Hz.

1. Connect harmonic distortion meter to MKR Tone Oscillator Sine Output (TP201) on PC-2. See Regulator-Timer Board layout for test point location (Fig. 8-4).
2. Set Tone Select Switch (17) to 1020.
3. Adjust tone oscillator amplitude adjustment (R253) and tone oscillator centering adjustment (R273) to obtain minimum distortion (1% maximum).
4. Connect external frequency counter to MKR Tone Oscillator Sine Output (TP201) on PC-2.

4-4 TONES (cont'd)

5. Set Tone Select Switch (17) to 1020 and adjust R262 on PC-2 to obtain a counter indication of 1020 Hz (±5 Hz). Repeat steps 1 thru 3.

6. Set Tone Select Switch (17) to 400 and adjust R260 on PC-2 to obtain a counter indication of 400 Hz (±2 Hz).

7. Set Tone Select Switch (17) to 1300 and adjust R266 on PC-2 to obtain a counter indication of 1300 Hz (±5 Hz).

8. Set Tone Select Switch (17) to 3000 and adjust R264 on PC-2 to obtain a counter indication of 3000 Hz (±15 Hz)

9. Disconnect external frequency counter and connect harmonic distortion meter to MKR Tone Oscillator Sine Output (TP201) on PC-2.

10. Set Tone Select Switch (17) to 400, 1300, and 3000 Hz positions and check that distortion for each tone is not more than 1%.

PROCEDURE: 30 Hz REF, 30 Hz VAR, 90 Hz, 150 Hz.

1. Connect frequency counter to 2160 KHz Oscillator Output (TP501) on PC-5. See VOR Bearing Logic Board layout for test point location (Fig. 8-10).

2. Counter should indicate frequency of 2160 KHz (±432 Hz). If frequency is not far off tolerance, crystal may be padded by placing small values of capacitance in parallel with the crystal to lower the frequency. The series capacitor may be increased in value to raise the frequency.

PROCEDURE: 30 Hz Sine, 9960 Hz FM Output.

1. Connect harmonic distortion meter to the 30 Hz VAR Sine Output (TP403) on PC-4. See 30 Hz Sine Board layout for test point location (Fig. 8-8).

2. Adjust amplitude trim pot (R489) and centering trim pot (R492) to obtain minimum distortion (<0.5%).

3. Connect harmonic distortion meter to the 30 Hz REF Sine Output (TP401) on PC-4.

4. Adjust amplitude trim pot (R406) and centering trim pot (409) to obtain minimum distortion (<0.5%).

5. Connect oscilloscope to the 9960 Hz FM Sine Output (TP402) on PC-4.

4-4 TONES (cont'd)

6. Adjust the 480 Hz deviation trim pot (R435) full ccw until no frequency modulation is evident on the oscilloscope display.

7. Connect harmonic distortion meter to the 9960 Hz FM Sine Output (TP402) on PC-4.

8. Adjust amplitude trim pot (R451) and centering trim pot (R4016) to obtain minimum distortion (<1.5%).

9. Connect channel 1 of a dual trace oscilloscope to the 30 Hz REF triangle waveform output, pin 6 of X401.

10. Use oscilloscope channel 2 to monitor phase lock pulse at collector (case) of Q406.

11. Adjust the 9960 Hz frequency adjustment (R437) to position phase lock pulse coincident with zero crossing of rising portion of 30 Hz REF triangle wave. See figure 6-1.

12. Connect frequency counter to the 9960 Hz FM Sine Output (TP402) on PC-4. Counter should indicate 9960 Hz (±1 Hz) (±100 Hz for sets without phase locked 9960 Hz).

13. Connect oscilloscope to TP402 and set controls as specified in figure 6-2(A).

14. Adjust scope trigger and position controls to vertically center the display and position the sweep trigger point at the left edge of the horizontal centerline as shown in figure 6-2(A).

15. Set oscilloscope controls as specified in figure 6-2(B).

16. Adjust the 480 Hz deviation pot (R435) for a Δt of 48.5 µs (±2.4µs) using the delayed sweep function to expand the display as shown in figure 6-2(B).

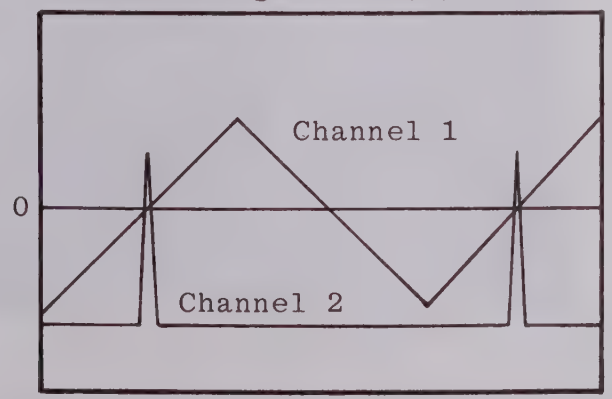

Figure 6-1. Phase Lock Pulse Adjustment

FM Deviation; ±480(±24)Hz

SCOPE SETTINGS

Vertical:
200mV/Div-Uncal

Horizontal:
Main Time Base
100µs/Div

Trigger:
Positive Slope

NOTE

Accuracy of calibration depends on oscilloscope sweep timing accuracy.

SCOPE SETTINGS

Vertical:
200mV/Div-Uncal

Horizontal:
Delay Time Base
10µs/Div

Trigger:
Positive Slope

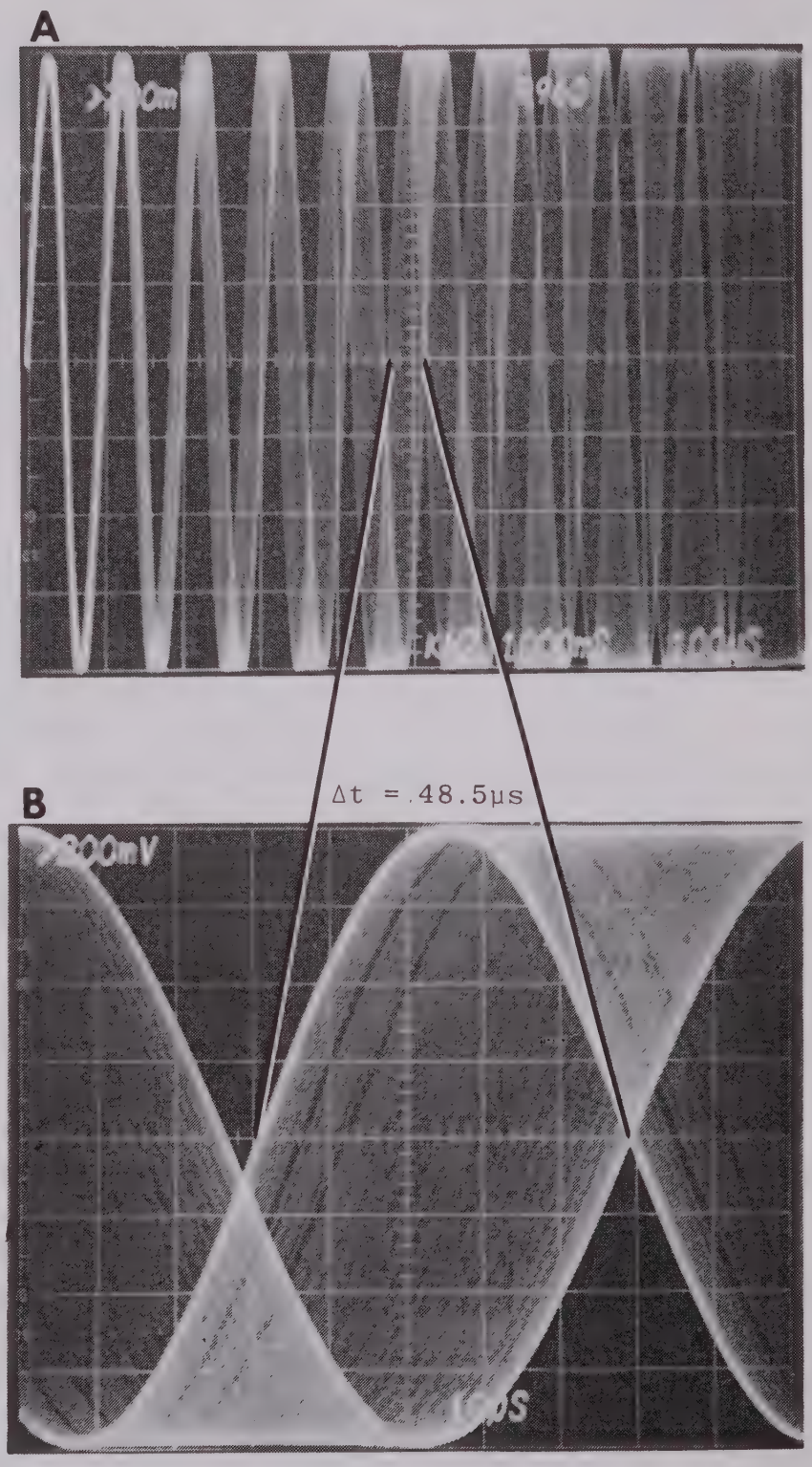

Fig. 6-2 9960 Hz Deviation Adjustment

4-4 TONES (cont'd)

PROCEDURE: 90 Hz., 150 Hz

1. Connect harmonic distortion meter to the 90 Hz Sine Output (TP301) on PC-3. See Combination Sine Board Layout for test point location (Fig. 8-6).

2. Adjust amplitude trim pot (R306) and centering trim pot (R312) to obtain minimum distortion (<0.5%).

3. Connect harmonic distortion meter to the 150 Hz Sine Output (TP302) on PC-3.

4. Adjust amplitude trim pot (R344) and centering trim pot (R347) to obtain minimum distortion (<0.5%).

4-5 COUNTER CLOCK OSCILLATOR FREQUENCY

DESCRIPTION: Two methods of calibrating the counter oscillator frequency are given. Perform the procedure best suited for the available equipment.

TEST EQUIPMENT: Receiver for station WWV (NBS station)
or
Frequency Counter

PROCEDURE: WWV Zero Beat Calibration

1. Tune a receiver to NBS station WWV at 5, 10 or 15 MHz. Use frequency with best signal strength and most stable output.

2. Connect one end of a test wire to the 100 kHz Clock Output (TP107) on PC-1. See Bearing Check Board layout for test point location (Fig. 8-2).

3. Place free end of test wire near receiver antenna terminals so that signal is heard through receiver.

4. Adjust trimmer capacitor (C123) on PC-1 for zero beat between the 100 kHz output and WWV carrier signal.

PROCEDURE: Phase Lock Time Base Calibration

1. Set Frequency MODE Switch (1) to VOR VAR.

2. Adjust Fine Variable Frequency Control (inner dial) full ccw into the detent, phase lock, position.

4-5 COUNTER CLOCK OSCILLATOR FREQUENCY (cont'd)

3. Adjust Coarse Variable Frequency Control (outer dial) to phase lock on any frequency except VOR XTL frequency.

NOTE

If the Variable Frequency Oscillator is set to the VOR XTL oscillator frequency, interaction between the two oscillators could result in calibration error.

4. Connect an external frequency counter to RF Output Connector (10).

5. Adjust Master Mod Control (24) full ccw, out of CAL position. Tune the Transmitter.

6. Adjust trimmer capacitor (C123) on PC-1 so that frequency indicated on frequency counter matches that indicated on Digital Display (31), ±0.0005%.

4-6 GENERATOR OUTPUT FREQUENCIES

DESCRIPTION: This procedure checks the output frequencies of the RF generator. Test set frequency counter time base must be calibrated before initiating this procedure. If procedure 4-5 has not been performed, it should be accomplished at this time or an external 400 MHz frequency counter should be connected to RF Output Connector (10).

TEST EQUIPMENT: Digital Voltmeter
Frequency Counter (optional)

PROCEDURE:

1. Connect digital voltmeter to collector of Q703 or to FL711. See Oscillator Board Layout for location (Fig. 8-23).

2. Adjust R746 to obtain voltmeter indication of 10.5 V (±0.1 V.)

3. Set Counter Mode Switch (3) to GEN.

4. Set Frequency MODE Switch (1) to MKR XTL.

4-6 GENERATOR OUTPUT FREQUENCIES (cont'd)

5. Adjust L710 for most stable oscillator operation. Digital Display (31) should indicate 75.000 MHz (±3 kHz).

6. If frequency is too high, up to 5 pF may be added across crystal to lower frequency. If frequency is too low, crystal must be replaced.

7. Set Frequency MODE Switch (1) to VOR XTL.

8. Switch between HI and LO positions of Crystal HI/LO Switch (2AP) and adjust L711 for most stable oscillator operation. Digital Display (31) should indicate 108.00 MHz (LO) typ and 112.800 MHz (HI) (±5 kHz) typ.

9. If frequency is too high, up to 5 pF may be added across crystal to lower frequency. If frequency is too low, crystal must be replaced.

10. Set Frequency MODE Switch (1) to LOC XTL.

11. Adjust L714 for most stable oscillator operation. Digital Display (31) should indicate 108.100 MHz (±5 kHz).

12. If frequency is too high, up to 5 pF may be added across crystal to lower frequency. If frequency is too low, crystal must be replaced.

13. Set Frequency MODE Switch (1) to G/S XTL.

14. Adjust L712 for most stable oscillator operation. Digital Display (31) should indicate 334.700 MHz (±16 kHz).

NOTE

Since the signal generator triples the oscillator frequency for glide slope operation, the crystals for G/S XTL are: 111.566 MHz (HI) and 109.866 MHz (LO).

15. Set Frequency Mode Switch (1) to COMM XTL.

16. Adjust L713 for most stable oscillator operation. Digital Display (31) should indicate 126.900 MHz (±6 kHz).

17. If frequency is too high, up to 5 pF may be added across crystal to lower frequency. If frequency is too low, crystal must be replaced.

4-6 GENERATOR OUTPUT FREQUENCIES (cont'd)

18. Set Frequency MODE Switch (1) to MKR VAR.

19. Adjust Variable Frequency Controls (5) full cw.

20. If necessary, adjust L703 for minimum Digital Display (31) indication of 78 MHz.

NOTE

Adjustment of L703 affects all the VAR bands. If L703 is adjusted, it will be necessary to adjust all of the other bands.

21. Set Frequency Mode Switch (1) to VOR VAR.

22. If necessary adjust L704 for minimum Digital Display (31) indication of 120 MHz.

23. Set Frequency MODE Switch (1) to COMM VAR HI.

24. If necessary, adjust L706 for minimum Digital Display (31) indication of 158 MHz.

25. Set Frequency MODE Switch (1) to COMM VAR LO.

26. If necessary, adjust L705 for minimum Digital Display (31) indication of 136 MHz.

27. Adjust Variable Frequency Controls (5) full ccw but do not set fine adjustment control into detent.

28. Adjust R745 for maximum Digital Display (31) indication of lower limits on each band as noted below:

COMM VAR LO Lower Limit	117 MHz
COMM VAR HI Lower Limit	134 MHz
LOC VAR Lower Limit	107 MHz
VOR VAR Lower Limit	107 MHz
MKR VAR Lower Limit	72 MHz
G/S VAR Lower Limit	327 MHz

29. Repeat steps 18 through 28 as required to insure that all bands are within desired ranges.

4-7 RF OUTPUT LEVEL

DESCRIPTION: This procedure is used to check the RF Output Level and calibrate the Output Attenuator Control (9).

TEST EQUIPMENT: RF Power Meter

PROCEDURE:

1. Set Monitor Meter Function Switch (30) to RF.
2. Adjust Tune Control (7) until Tune Indicator (6) is no longer illuminated.
3. Press Fine Tune Switch (8) and adjust Tune Control (7) for minimum meter indication.
4. Adjust RF Level trim pot (R386) to center meter needle in white band in center of scale.
5. Repeat steps 2 and 3 for each position on the Frequency MODE Switch (1) to center meter for each band.
6. Set Frequency MODE Switch (1) to VOR VAR. Set to 114.0 MHz.
7. Adjust Master Mod Level Control (24) full ccw, out of detent position.
8. Connect RF Power Meter to RF Output Connector (10).
9. Adjust Output Attenuator Control (9) to -30 dBm.
10. Loosen the two attenuator knob set screws closest to dial.
11. Hold dial at -30 dBm setting and turn knob until power meter indicates -30 dBm.
12. Tighten set screws. Dial calibrations and actual RF level output should agree from -30 dBm to -120 dBm. Refer to Attenuator Correction Chart provided with test set for measured frequency response at time of calibration.

4-8 PERCENT MODULATION OF TONES (PREFERRED)

DESCRIPTION: Two procedures are given for calibrating the percent modulation of tones. The first procedure is the most accurate and is the preferred method of calibration. The alternate procedure is less accurate, but does not require an accurate modulation meter.

4-8 PERCENT MODULATION OF TONES (PREFERRED) (cont'd)

5. Connect digital voltmeter to Signal Generator Demodulated Output Connector (B) and record ac voltage indicated.

6. Delete 150 Hz signal by setting LOC DDM Control to 90.

7. Adjust G/S Centering Adjustment (15) to obtain a voltmeter indication equal to that recorded in step 5 (±0.001 Vac).

PROCEDURE: COMM Modulation

1. Set Frequency MODE Switch (1) to COMM XTL.

2. Set Tone Select Switch (17) to 1020.

3. Adjust COMM Modulation trim pot (R4014) to obtain external modulation meter indication of 30%.

4. Remove power from test set, reinstall PC-4 without PC Board Extender and reapply power.

4-9 PERCENT MODULATION OF TONES (ALTERNATE)

DESCRIPTION: This procedure for calibrating the percent modulation of tones is not as accurate as that given in 4-8, but may be used when an accurate modulation meter is not available.

TEST EQUIPMENT: Digital multimeter

PROCEDURE: Equipment Setup

1. Disconnect P802 from rear of transmitter assembly. See figure 10-1-1.

2. Connect digital multimeter to Signal Generator Demodulated Output Connector (B) and apply power to the test set.

3. Set Frequency MODE Switch (1) to MKR XTL and record dc offset voltage indicated (approx. 260 mV). Define this voltage as MKR V1.

4. Set Frequency MODE Switch (1) to VOR XTL and record dc offset voltage indicated (approx. 260 mV). Define this voltage as VOR V1.

5. Set Frequency MODE Switch (1) to LOC XTL and record dc offset voltage indicated (approx. 260 mV). Define this voltage as LOC V1.

4-9 PERCENT MODULATION OF TONES (ALTERNATE) (cont'd)

6. Set Frequency MODE Switch (1) to G/S XTL and record dc offset voltage indicated (approx. 300 mV). Define this voltage as G/S V1.

7. Set Frequency MODE Switch (1) to COMM XTL and record dc offset voltage indicated (approx. 260 mV). Define this voltage as COMM V1.

8. Remove power from test set and reconnect P802 to transmitter.

PROCEDURE: MKR Tones

1. Set Frequency MODE Switch (1) to MKR XTL and Tone Select Switch (17) to 1300).

2. Adjust Master Mod Level Control (24) to CAL and record dc voltage indicated (approx. 4 V). Define this voltage as MKR V2.

3. Calculate ac voltage for 100% modulation by substituting recorded values into the following equation:

$$\text{Vac for 100\% Modulation} = \frac{\text{MKR V2-MKR V1}}{1.414}$$

4. Adjust Master Mod Level Control (24) to obtain ac voltage indication equal to the value calculated in step 3.

5. Set Monitor Meter Function Switch (30) to 100%.

6. Adjust the 100% Modulation trim pot (R391) on PC-3 for full scale Monitor Meter (29) indication of 100%.

7. Multiply the value calculated in step 3 by 0.30 to obtain ac voltage required for 30% modulation.

8. Adjust Master Mod Level Control (24) to obtain ac voltage indication equal to the value calculated in step 7.

9. Set Monitor Meter Function Switch (30) to 30%.

10. Adjust the 30% Modulation trim pot (R389) on PC-3 for full scale Monitor Meter (29) indication of 30%.

11. Set Master Mod Level Control (24) to CAL.

4-9 PERCENT MODULATION OF TONES (ALTERNATE) (cont'd)

12. Multiply value calculated in step 3 by 0.95 to obtain ac voltage required for 95% modulation.

13. Adjust Marker trim pot (R433) on PC-4 to obtain ac voltage indication equal to the value calculated in step 12.

PROCEDURE: VOR Tones

1. Set Frequency MODE Switch (1) to VOR XTL and Tone Select Switch (17) to CTR IN.

2. Adjust Master Mod Level Control (24) to CAL and the 9960 Hz Ref Level Control (23) full ccw.

3. Adjust the 30 Hz VAR Level Control (22) full cw and record dc voltage indicated (approx. 4 V). Define this voltage as VOR V2 and calculate the ac voltage required for 30% modulation using the following equation.

$$\text{Vac for 30\% modulation} = \frac{\text{VOR V2}-\text{VOR V1}}{1.414} \times 0.30$$

4. Adjust the 30 Hz VAR trim pot (R431) on PC-4 to obtain ac voltage indication equal to the voltage calculated in step 3.

5. Adjust the 30 Hz VAR Level Control (22) full ccw and the 9960 Hz Ref Level Control (23) full cw.

6. Record dc voltage indicated (approx. 4 V) and define it as VOR V2. Calculate Vac for 30% modulation by using equation in step 3.

7. Adjust the 9960 Hz trim pot (R432) on PC-4 to obtain ac voltage indication equal to the voltage calculated in step 6.

8. Adjust the 9960 Hz Ref Level Control (23) full ccw and set Tone Select Switch (17) to 1020.

9. Record dc voltage indicated (approx. 4 V) and define this voltage as VOR V2. Calculate ac voltage required for 30% modulation using the equation in step 3.

10. Adjust VOR Tone trim pot (R4087) on PC-4 to obtain ac voltage indication equal to the voltage calculated in step 9.

4-9 PERCENT MODULATION OF TONES (ALTERNATE) (cont'd)

PROCEDURE: LOC Modulation and Centering

1. Set Frequency MODE Switch (1) to LOC XTL. Set LOC DDM Control (21) and G/S DDM Control (14) to 0.

2. Record dc voltage indicated (approx. 4 V) and define as LOC V2. Calculate ac voltage required for 20% modulation using the following equation:

$$\text{Vac for 20\% modulation} = \frac{\text{LOC V2} - \text{LOC V1}}{1.414} \times 0.20$$

3. Set G/S DDM Control (14) to 150 and adjust LOC trim pot (R454) on PC-4 to obtain ac voltage indication equal to that calculated in step 2.

4. Set G/S DDM Control (14) to 90 and adjust the LOC Centering Adjustment (19) to obtain ac voltage indication equal to that calculated in step 2.

PROCEDURE: G/S Modulation and Centering

1. Set Frequency MODE Switch (1) to G/S XTL, and LOC DDM Control (21) and G/S DDM Control (14) to 0.

2. Record dc voltage indicated (approx. 4 V) and define as G/S V2. Calculate ac voltage required for 40% modulation using the following equation:

$$\text{Vac for 40\% modulation} = \frac{\text{G/S V2} - \text{G/S V1}}{1.414} \times 0.40$$

3. Set LOC DDM Control (21) to 150 and adjust G/S trim pot (R482) on PC-4 to obtain ac voltage indication equal to that calculated in step 2.

4. Set LOC DDM Control (21) to 90 and adjust the G/S Centering Adjustment (15) to obtain ac voltage indication equal to that calculated in step 2.

PROCEDURE: COMM Modulation

1. Set Frequency MODE Switch (1) to COMM XTL and Tone Select Switch (17) to 1020.

2. Record dc voltage indicated (approx. 4 V) and define as COMM V2. Calculate ac voltage required for 30% modulation using the following equation:

4-9 PERCENT MODULATION OF TONES (ALTERNATE) (cont'd)

$$\text{Vac for 30\% modulation} = \frac{\text{COMM V2-COMM V1}}{1.414} \times 0.30$$

3. Adjust COMM trim pot (R4010) on PC-4 to obtain ac voltage indication equal to that calculated in step 2.

4. Remove power from test set, reinstall PC-4 without PC Board Extender and reapply power.

4-10 BEARING CHECK CIRCUIT

DESCRIPTION: This procedure is designed to verify the performance of the bearing generator at 90^0 and 270^0 and to provide front panel meter verification.

TEST EQUIPMENT: Oscilloscope
Digital Voltmeter

PROCEDURE:

1. Set Frequency MODE Switch (1) to VOR XTL and Tone Select Switch (17) to CTR IN.

2. Adjust Master Mod Level Control (24) to CAL, and the 30 Hz VAR Level Control (22) and the 9960 Hz REF Level Control (23) full cw.

3. Adjust Tune Control (7) until Tune Indicator (6) is no longer illuminated. Press Fine Tune Switch (8) and adjust Tune Control (7) for minimum meter indication.

4. Connect oscilloscope to Signal Generator Demodulated Output Connector (B) and verify output to be a typical VOR signal.

5. Set Monitor Meter Function Switch (30) and Counter Mode Switch (3) to BRG.

6. Set VOR Bearing Select Switches (27) to 090.0 and VOR Bearing TO/FROM Switch (28) to TO.

7. Connect digital voltmeter to VOR Demodulated Output Test Point (TP-103) on PC-1.

8. Adjust Frequency trim pot (R118) on PC-1 to obtain voltmeter indication of 5.5 Vdc.

4-10 BEARING CHECK CIRCUIT (cont'd)

9. Set Counter Mode Switch (3) to any position except BRG and allow test set to stabilize for several minutes.

10. Adjust Meter Bearing Centering Adjust (4) full cw.

11. Adjust R152 to position Monitor Meter (29) needle to right edge of scale.

12. Adjust Meter Bearing Centering Adjust (4) to position Monitor Meter (29) needle to center scale.

13. Set Counter Mode Switch (3) to BRG and allow meter movements to stop.

14. Alternately set VOR bearing TO/FROM Switch to the TO and FROM positions and adjust Phase trim pot (R128) to obtain same meter indication in both positions.

15. Adjust Balance trim pot (R150) for center scale meter indication.

16. Repeat steps 10 through 15 as necessary to obtain center scale meter indication.

NOTE

If the test set has a bearing error of more then 0.4 degrees, the above procedure can not be performed. Once adjusted, the bearing monitor circuit is intended to monitor the bearing output and quickly show if any deviation from normal operation exists.

4-11 COMM POWER CIRCUIT

DESCRIPTION: This procedure checks the accuracy of the 100 W and 10 W COMM Power circuits.

TEST EQUIPMENT: RF Power Meter

PROCEDURE:

1. Set Monitor Meter Function Switch (30) to 100 W. Set Counter Mode Switch (3) to MHz position.

2. Connect an accurate thruline RF Power Meter to COMM Transmitter Input Connector (11) and apply 30 to 50 Watts of unmodulated RF power.

4-11 COMM POWER CIRCUIT (cont'd)

NOTE See Table 1-1 in Section 1 for Input Power versus Time Limits. Exceeding time limits may cause internal damage to set and/or 25 dB pad.

3. Adjust the 100 W trim pot (R160) on PC-1 to obtain Monitor Meter (29) indication corresponding to power meter indication. Set Monitor Meter Function Switch (30) to 10 W.. Apply 4 to 8 watts of unmodulated RF power through power meter.

4. Adjust the 10 W trim pot (R163) on PC-1 to obtain Monitor Meter (29) indication corresponding to power meter indication.

4-12 BATTERY CHARGER

DESCRIPTION: This procedure is used to check that proper battery charging voltage is provided during normal operation and that battery timer turns off set after desired delay.

TEST EQUIPMENT: 100 ohm, 20 watt resistor
dc Voltmeter
External Power Supply (14 to 16 volts)
Stopwatch

PROCEDURE:

1. Disconnect red lead from battery and connect a 100 ohm, 20 watt resistor. Connect other resistor lead to ground. Connect dc voltmeter across resistor and apply ac power to test set.

2. Adjust Charge trim pot (R220) on PC-2 to obtain voltmeter indication of 16.1 Volts (±0.1 V).

3. Disconnect ac power cord from test set and replace resistor with external power supply (14 to 16 V). Set Monitor Meter Function Switch (30) to BAT.

4. Adjust Battery trim pot (R393) on PC-3 to obtain Monitor Meter (29) indication of power supply voltage on 0 to 30% scale.

5. Press AC/Battery Power Switch (25) to BAT and use stopwatch to check that battery timer turns off test set after 6 to 10 minutes. To change battery timer duration, increase values of R246 (10 MΩ) or C214 (47 µF) on PC-2 for longer delays or decrease values for shorter delays.

4-13 LOCALIZER DDM SWEEP

DESCRIPTION: These procedures are used to set up Localizer DDM sweep slew rate, sweep centering and sweep amplitude.

TEST EQUIPMENT:
- Oscilloscope
- ACDVM
- BNC "tee" Connector
- Modulation Meter
- Frequency Counter

PROCEDURE:

1. On Auto Pilot Sweep Generator PC Board make sure Switch #2 of Dip Switch S1401 is "ON" and Switch #3 of Dip Switch S1401 is "OFF".

2. Connect Oscilloscope and digital AC Voltmeter (ACDVM) to SIG GEN DEMOD OUT Connector on rear panel of test set, using BNC "tee" connector.

3. Set Frequency MODE Switch (1) to LOC XTL at -20 dB and tune attenuator.

4. Set following NAV-402AP controls to positions indicated:

   Master Mod Level Control (24). . . . . .CAL.
   Tone Select Switch (17). . . . . .MOD IN.
   LOC DDM Control (21) . . . . . .arrow.
   LOC VAR DDM/DDM Sweep AMP CNTL (20AP). . .Fully ccw.
   DDM Sweep Switch (32AP). . . . . .AL.
   G/S DDM Control (14) . . . . . .90.

5. Note ACDVM indication. Reading should be approximately .578 VAC.

6. Set G/S DDM Control (14) to 150 and adjust R1426 (Centering) on Auto Pilot Sweep Generator PC Board until ACDVM indication is same as in Step 5 (within ±2 mV).

NOTE

The adjustment of R1426, with the G/S DDM Control (14) set to 150, will cause the .578 VAC Voltmeter reading obtained in Step 5 to change. The technician should therefore alternate the G/S DDM Control (14) from 90 to 150 several times, while adjusting R1426, to ensure that an approximate .578 VAC Voltmeter reading is obtained for both settings.

7. Set Switch #3 on Dip Switch S1401 to "ON" and Switch #2 on Dip Switch S1401 to "OFF" on Auto Pilot Sweep Generator PC Board.

8. Connect Modulation Meter to RF Output Connector (10) on front panel of test set.

9. Set G/S DDM Control (14) to 90 and record Modulation Meter indication.

10. Set LOC DDM/DDM Sweep AMP CNTL (20AP) fully cw and adjust R1432 (Sweep Amplitude) on Auto Pilot Sweep Generator PC Board to obtain a Modulation Meter indication that is 1.5% higher than value noted in Step 9.

11. Set LOC DDM/DDM Sweep AMP CNTL (20AP) fully cw (30 μA).

12. With G/S DDM Control (14) set to 90, record ACDVM indication as value V1. Return G/S DDM Control (14) to 150 and record this ACDVM indication as value V2.

13. Divide value V1 by value V2 as shown below and verify resulting quotient is within proper tolerance:

$$\frac{V1}{V2} = 1.168\ (\pm 0.025)$$

14. Set Switch #3 of Dip Switch S1401 to "OFF" and Switch #2 of Dip Switch S1401 to "ON".

15. Connect Frequency Counter to pin 15 of X1405 (CD4029) and adjust R1404 (Sweep Rate Adj) to obtain a counter indication of 3.2 Hz.

NOTE

With sweep rate adjusted to 3.2 Hz, the LOC DDM will complete one sweep in 20 seconds. For different sweep times, adjust clock frequency using the following equation:

$$\text{Clock Frequency} = \frac{64}{\text{Sweep Time}}\ \text{Hz}$$

4-3	**POWER SUPPLY VOLTAGES**			
	11 V Regulator	10.90 V	_____	11.10 V
	5 V Regulator	.4.90 V	_____	5.00 V
	-6.2 V Regulator	-6.00 V	_____	-6.40 V
4-4	**TONES**			
	1020 Hz Distortion		_____	1% max.
	1020 Hz Frequency	1015 Hz	_____	1025 Hz
	1020 Hz Distortion		_____	1% max.
	1020 Hz Frequency	1015 Hz	_____	1025 Hz
	400 Hz Frequency	.398 Hz	_____	402 Hz
	1300 Hz Frequency	1295 Hz	_____	1305 Hz
	3000 Hz Frequency	2985 Hz	_____	3015 Hz
	2160 kHz Oscillator Frequency		_____	±432 Hz
	30 Hz VAR Distortion		_____	<0.5%
	30 Hz REF Distortion		_____	<0.5%
	9960 Hz Distortion		_____	<1.5%
	Phase Lock Pulse Position		_____	(✓)
	9960 Hz Frequency		_____	
	480 Hz Deviation Δt	46.1 µs	_____	50.9 µs
	90 Hz Distortion		_____	<0.5%
	150 Hz Distortion		_____	<0.5%
4-5	**COUNTER CLOCK OSCILLATOR FREQUENCY**			
	WWV Zero Beat Calibration Method			
	Zero Beat		_____	(✓)
	Phase Lock Time Calibration Method			
	Output Frequency Error		_____	(±0.0005%)
4-6	**GENERATOR OUTPUT FREQUENCIES**			
	10.5 V Adjust	.10.4 V	_____	10.6 V
	MKR XTAL		_____	(±3 kHz)
	VOR XTAL LO		_____	(±5 kHz)
	VOR XTAL HI		_____	(±5 kHz)
	LOC XTAL		_____	(±5 kHz)
	G/S XTAL		_____	(±16 kHz)
	COMM XTAL		_____	(±6 kHz)
	MKR VAR Upper Limit		_____	78 MHz
	VOR VAR Upper Limit		_____	120 MHz
	COMM VAR HI Upper Limit		_____	158 MHz
	COMM VAR LO Upper Limit		_____	136 MHz
	COMM VAR LO Lower Limit		_____	117 MHz
	COMM VAR HI Lower Limit		_____	134 MHz
	LOC VAR Lower Limit		_____	107 MHz
	VOR VAR Lower Limit		_____	107 MHz
	MKR VAR Lower Limit		_____	72 MHz
	G/S VAR Lower Limit		_____	327 MHz
4-7	**RF OUTPUT LEVEL**			
	RF Level - MONITOR Meter Centering		_____	(✓)
	Attenuator Dial Setting (-30 dBm)		_____	(✓)

4-8 PERCENT MODULATION OF TONES (PREFERRED)

MONITOR Meter 100%		_____	(✓)
MONITOR Meter 30%.		_____	(✓)
1020 Hz Tone		_____	95%
30 Hz VAR.		_____	30%
9960 Hz REF.		_____	30%
1020 Hz.		_____	30%
150 Hz LOC		_____	20%
LOC Centering.		_____	(✓)
150 Hz G/S		_____	40%
G/S Centering.		_____	(✓)
COMM Modulation.		_____	30%

4-9 PERCENT MODULATION OF TONES (ALTERNATE)

MKR V1		_____	260 mV app.
VOR V1		_____	260 mV app.
LOC V1		_____	260 mV app.
G/S V1		_____	300 mV app.
COMM V1.		_____	260 mV app.
MKR V2		_____	4 V app.
Vac for 100% Modulation.		_____	
MONITOR Meter 100%		_____	(✓)
Vac for 30% Modulation		_____	
MONITOR Meter 30%.		_____	(✓)
Vac for 95% Modulation		_____	
Vac for 30% 30 Hz VAR Modulation		_____	
Vac for 30% 9960 Hz Modulation		_____	
Vac for 30% 1020 Hz Modulation		_____	
Vac for 30% LOC Modulation		_____	
Vac for 40% G/S Modulation		_____	
Vac for 30% COMM Modulation.		_____	

4-10 BEARING CHECK CIRCUIT

MONITOR Meter Minimum.		_____	(✓)
VOR output		_____	(✓)
VOR Demodulated Output Voltage (TP-103).		_____	5.5 Vdc
MONITOR Meter Centering (Balance).		_____	(✓)

4-11 COMM POWER CIRCUIT

100 Watt Adjust.		_____	(✓)
10 Watt Adjust		_____	(✓)

4-12 BATTERY CHARGER

Battery Charger Voltage.	16.0 V	_____	16.2 V
Batt Voltage on MONITOR Meter.		_____	(✓)
Battery Timer Operation.		_____	(✓)
Timer Duration	6 min.	_____	10 min.

4-13 LOCALIZER DDM SWEEP

SIG GEN DEMOD OUT Connector Voltage. . . .	_____	
Modulation Meter Indication (Low). . . .	_____	
Modulation Meter Indication (High)	_____	
V1	_____	
V2	_____	
$\frac{V1}{V2}$	_____	1.168 (±0.25)
Sweep Rate	_____	3.2 Hz

5 Troubleshooting

5-1 This section contains information to aid in isolating and repairing some common malfunctions which might occur in the test set. Table 6-1 lists all the test points on each printed circuit board. The Troubleshooting Chart, table 6-2, is a guide to help isolate malfuctions which might occur in each section of the test set.

5-2 The Troubleshooting Chart contains only the most common symptoms and probable causes and can not isolate every possible malfunction. Schematics are included, starting with figure 8-1, to aid in detailed troubleshooting and circuit analysis. The component placement for each printed circuit board is included with each schematic.

5-3 Because of the complexity of the Power Amplifier and Attenuator assemblies, factory assistance should be sought prior to attempting any repairs to these assemblies.

Table 6-1 Printed Circuit Board Test Points

Test Points	Function
	Bearing Check Board, PC-1
TP101	REF 30 Hz Sine Output
TP102	180^0 VAR 30 Hz Sine Output
TP103	VOR Demod Output
TP104	9960 Hz FM Oscillator Output
TP105	Phase Detector Output
TP106	0^0 VAR 30 Hz Sine Output
TP107	100 KHz Clock Output
	Regulator-Timer Board, PC-2
TP201	MKR Tone Oscillator Sine Output
	Combination Sine Board, PC-3
TP301	90 Hz Sine Output
TP302	150 Hz Sine Output

Table 6-1 (cont.)

Test Points	Function
	30 Hz Sine Board, PC-4
TP401	30 Hz REF Sine Output
TP402	9960 Hz FM Sine Output
TP403	30 Hz VAR Sine Output
	VOR Bearing Logic Board, PC-5
TP501	2160 Oscillator Output
TP502	90 Hz Square Wave Output
TP503	150 Hz Square Wave Output
TP504	30 Hz REF Square Wave Output
TP505	Bearing Pick-Off
TP506	30 Hz VAR Square Wave Output

Table 6-2 TROUBLESHOOTING CHART

Section	Symptom	Possible Cause
Power Supply	No +11 V output in ac operation	Fuse F1101 or F1102 open. CR1101 bad. Short to ground on +11 V supply line. Q224 open.
	No +11 V output in Battery operation.	Battery voltage too low; low voltage detector in operation. K201 bad. - Coil or open contacts. Short to ground on +11 V supply line. Q224 open.
	+11 V output low	High current load on +11 V supply line. Current protect circuit in operation.
	No +5 V output.	Check F1101, CR1101. Q1151 bad. X1151 bad. X1152 bad.
	No -6.2 V output.	No negative voltage out from 5 V Regulator. (See No +5 V Output) Check CR1151 & 1152. Q213 open. High current load on -6.2 V supply. Q208 or Q209 bad. CR1152 or CR1153 open.
1020, 400, 1300 and 3000 Hz Tone Generator	No Tone output.	X201 or X202 bad. Q216, Q217, Q214 or Q215 bad. Short on output line to ground.
	Frequencies not proper.	X201 or X202 bad (Check for offset output voltage level). Q216, Q217, Q214 or Q215 not saturating completely. C209 bad.

Table 6-2 (cont'd)

Section	Symptom	Possible Cause
1020, 400, 1300 and 3000 Hz Tone Generator (cont'd)	Distortion on output frequency.	Check triangular wave at input to R270. (2.1 KΩ 1%). One of the stages of the synthesizer is bad. Check for voltages indicated on schematic. Check for DC level on output of synthesizer to be 5.5 V.
VOR BRG Generator 90 Hz and 150 Hz Tones	Output 30 Hz Ref or 30 Hz VAR not at correct frequency.	Check frequency at TP501. Should be 2.16 MHz ±0.02%. If not: Check Y501 Check X505
	30 Hz REF.	Division of X511, X514, X519, X518, X517, X516 wrong. Check X511.
	30 Hz VAR.	Division of X508, X507, X506, or control X509, X510 or X520 bad.
	30 Hz REF output at TP504 not symetrical.	Reset in 30 Hz REF counter inoperative. X512, X510, X513, or X511 bad.
	No 30 Hz VAR signal.	X504 bad. X509 or X520 bad. X510 bad. X505 bad.
	No 30 Hz VAR signal at 0° Switch setting.	X505 bad. X504 bad.
	Bearing Switches select incorrect headings.	Check diodes CR501 through CR512. Isolate which line is bad.

Table 6-2 (cont'd)

Section	Symptom	Possible Cause
VOR BRG Generator 90 Hz and 150 Hz Tones (cont'd)		(1,2,4, or 8) is causing the wrong bearing. X504 bad.
	90 Hz frequency wrong.	X515 bad - Check for division by 12. Input to X515 wrong. Check freq at TP501 and X511, X514, X519, X518, X510.
	150 Hz frequency wrong.	X503 or X502 bad. X501 bad. Input to X503 wrong.
	No phase shift between 90 Hz and 150 Hz signals.	X510 bad. S9 input broken. 30 Hz VAR system inoperative.
30 Hz REF and 30 Hz VAR Sine Output NOTE: The 30 Hz REF and 30 Hz VAR synthesizers are identical. Possible causes are given for REF section only. Refer to the corresponding component if problems occur in the 30 Hz section.	No 30 Hz sine output.	Check for square wave input at PC4-4. Q401, Q402, or Q403 bad. X401 bad. Short to ground on output of synthesizer.
	Distortion on 30 Hz sine wave.	X401 not centered. X401 bad. One of the stages of synthesizer bad. Check voltages according to schematic.
	No 9960 Hz output.	X405, X406, or X407 bad. Q409 and Q410 bad. Q409 or Q410 have poor saturation characteristic. Q408 bad.

Table 6-2 (cont'd)

Section	Symptom	Possible Cause
30 Hz REF and 30 Hz VAR Sine Output (cont'd)	9960 at wrong frequency.	Check operation of Q409, Q410, X405, X406 or X407.
	No 9960 Hz phase lock.	Check CR458. Q404 or Q405 bad. Q406, Q407 bad. X403 or X404 bad. Check CR454-CR457.
	No FM modulation of 9960 Hz signal.	30 Hz REF sine output inoperative.
	FM deviation improper.	X405A bad. Check offset voltage. CR417, CR418, or CR419 bad. Q401 bad. Check R434 and R435 value.
	Distortion on 9960 Hz sine output.	X406 output wrong. Check P-P amplitude on pin 1 of X406. Check offset voltage. Heavy load at output. Check sine synthesizer. +5.5 V supply not proper.
90 Hz and 150 Hz Sine Output NOTE: The 90 Hz and 150 Hz sine Generators are identical. Causes are given for the 90 Hz system only.	No 90 Hz output.	No 90 Hz square wave input. Q308 bad. Q303 or Q305 bad. X305 bad. C303 bad.
	Distortion on 90 Hz output.	X305 bad. One stage of sine synthesizer bad. Centering to X305 wrong. Check R312.

Table 6-2 (cont'd)

Section	Symptom	Possible Cause
90 Hz and 150 Hz Sine Output (cont'd)	No G/S 90 Hz sine output.	X307 bad. R6 input broken.
	No LOC 90 Hz sine output.	X308 bad. R4 input broken.
	No LOC and G/S 150 Hz.	X309 bad.
Tones to Mode Switch	None of the tones present at NAV tone output jack J1101.	Q307, Q301, or Q302 bad. X303 bad. X301 bad. Short to ground at output jack.
	Tones present on Signal Generator Demod jack, J1104, but not on NAV tones out, J1101.	X301 bad or broken connection.
1020, 400, 1300, 3000 Hz Tones	No tones out.	Check wiring to S7A (tone output) or S7B (tone select). X402 bad.
VOR Tones	No tones out.	No 5.5 V to center of R2 and R3
	No Ident tone on VOR signal.	X402 bad. Ident Tone Generator inoperative.
LOC Tones	No LOC tone to Ident tone.	X402 bad.
G/S Tones	No G/S tone.	X407 bad.
COMM Tones	No COMM tone.	X402 bad. Check wiring on Mode Switch.
Counter Clock Oscillator Frequency	No 100 kHz output to Counter Board.	Oscillator inoperative. Check Oscillator at collector of Q106. X110 or X111 bad. Q107 or Q108 bad.

Table 6-2 (Cont'd)

Section	Symptom	Possible Cause
Counter Clock Oscillator Frequency (cont'd)	Oscillator inoperative.	Q105 or Q106 bad. Y101 crystal bad.
	Frequency will not zero to exactly 10 MHz.	Check Y101. Q105 or Q106 bad. C125 bad.
Generator Output Frequencies	Marker XTAL off frequency.	Y704 bad. L710 needs adjustment. Q709 bad.
	No MKR output on XTAL.	Y704 bad. Q709 bad.
	VOR XTAL HI off frequency.	Y706 bad. L711 needs adjustment. Q710 bad.
	No output on VOR XTAL HI.	Y706 bad. Q710, Q711 or Q715 bad.
	VOR XTL LO off frequency.	Y705 bad. L711 needs adjustment. Q710 bad.
NOTE: Any adjustment of L711 and/or L712 requires check of both HI and LO crystal operation.	No output on VOR XTL LO.	Y705 bad. Q710 bad. Q714 bad.
	G/S XTL HI off frequency.	Y701 bad. L712 needs adjustment Q706 bad.
	No output on G/S XTL HI.	Y701 bad. Q706 bad. Q713 bad. Q711 bad.
	G/S XTL LO off frequency.	Y707 bad. L712 needs adjustment Q706 bad.
	No output on G/S XTL LO.	Y707 bad. Q706 bad. Q712 bad.
	HI/LO Switch (2AP) does not affect operation.	L711 bad. Check 11 V switch at FL715.

Table 6-2 (Cont'd)

Section	Symptom	Possible Cause
	LOC XTL off Frequency.	Y703 bad. L714 needs adjustment Q708 bad.
	No LOC output on XTL.	Y703 bad. Q708 bad.
	COMM XTAL off frequency.	Y702 bad. L713 needs adjustment. Q707 bad.
	No COMM output on XTAL.	Y702 bad. Q707 bad.
	None of the frequency modes extends low enough in frequency.	Low limit pot R745 should be reset. CR705 bad.

Table 6-2 (cont'd)

Section	Symptom	Possible Cause
Generator Output Frequencies (cont'd)	None of the frequency modes extend high enough in frequency.	Follow the procedure as described in the Calibration Procedures, paragraph 4-6.
	VOR, LOC, G/S VAR band does not have broad enough frequency range.	Adjust L705 and low frequency pot R745 as required.
	MKR, VAR band does not have broad enough frequency range.	Adjust L703 and low frequency pot R745 as required.
	LO COMM band needs more frequency range.	Adjust L705 and low frequency pot R745 as required.
	HI COMM band needs more frequency range.	Adjust L706 and low frequency pot R745 as required.
NOTE: Above frequency adjustment affects the other bands so it is necessary to check all other VAR bands after every adjustment.		
	No RF output at J702.	Q704 or Q705 bad.
	FM on RF output.	10.5 V Regulator bad. 11 V Regulator bad. X701, Q703 or CR712 bad.
Phase Lock Section	No Phase Lock.	No input to Assembly 4 from Prescaler. No input to Assembly 4 from Counter.
		No +11 V input from S12.
	Phase Lock difficult to achieve.	Q954 or Q955 leaky. Q953 bad.

Table 6-2 (cont'd)

Section	Symptom	Possible Cause
RF Output Level	Low RF output.	Check Diodes CR1 through CR4 in Diode protect block. P.A. not properly tuned. X802 bad. Q804 bad. NOTE: If X802 is defective, the tune lamp may not go out. Q805 through Q809 is bad (depending on band used).
	Tune Lamp will not extinguish.	Q801, Q802, or Q803 bad. No RF to XMTR X801 or X802 bad. Overmodulation. Input RF frequency out of bandwidth of tune frequency. No RF in. Check Buffer amp out.
	Tune lamp will not illuminate.	Q801, Q802, Q803 bad. Defective bulb.
	Meter does not indicate in white band on meter.	P.A. not properly tuned. R386 needs adjustment.
Percent Modulation	No % Modulation Meter indication.	X304 bad. X302 bad. P.A. not in proper tune. No modulation being applied to modulator.

Table 6-2 (cont'd)

Section	Symptom	Possible Cause
Percent Modulation (cont'd)	% Mod reads too high.	Input tone distorted to modulator by large amount. Check Tone Out. One of the FET Switch Q805 through Q809 shorted.
	% Mod reads too low.	Input tone to modulator low in level. Q805 through Q809 bad. X304 bad. X302 bad.
	100% scale and 30% scale do not agree togther.	R389 or R391 probably out of adjustment. Q307 bad. Q302 bad.
LOC and G/S Centering	Not able to center LOC or G/S.	Amplitude of 90 Hz sine output too high, or low. Amplitude of 150 Hz sine output too high or low. X309 bad. LOC X308 bad. G/S X307 bad.
Bearing Check Circuit	No VOR Demod at TP103.	X101 or X102 bad. 9960 Hz oscillator inoperative. Check: X104 or X105, Q103 or Q104. Phase Lock loop inoperative. Check: X102 Q101 Q102.

Table 6-2 (cont'd)

Section	Symptom	Possible Cause
Bearing Check circuit (cont'd)	No 30 Hz at TP101.	No 30 Hz output at TP103. X101 bad. X102 bad.
	No 0^0 VAR at TP106.	X106 bad. X101 bad.
	No 180^0 VAR at TP102.	X107 bad.
	No detector voltage at TP105.	X106 bad. CR106-CR109 bad.
	Unable to center meter.	X109 bad. Balance Adjust R150, Phase Adjust R128 or Trim Adjust R152 need resetting. No 30 Hz VAR input to circuit (PC-1). No 9960 Hz input to circuit (PC-1). -6.2 V or +11 V not present.
	Bearing error.	C403 and C412 bad or leaky. X401 and X408 bad.
Power Meter	No power indication on meter.	CR901 bad. CR902 bad. X901 bad.
	Power meter reading low.	25 dB pad damaged. CR901 bad. R160 and R163 need adjustment.
	Meter does not indicate peak power readings.	C903 bad. Wiring to S10 open.

Table 6-2 (cont'd)

Section	Symptom	Possible Cause
Power Meter (cont'd)	Power Meter pegs without any input.	X901 bad. CR901 bad. R905 can be adjusted.
	Power Meter reads, but Counter does not read frequency.	No prescaler output. Input to prescaler may be shorted.
Counter Operation	No count in GEN mode.	No prescaler input. No clock input from PC-1.
	No count in external mode.	No input to pre-scaler from front panel. Preacaler defective. Q1001 or Q1004 bad. X1008 bad.
	No count in bearing mode.	Q501 bad. X504 bad. X509 bad. No 30 Hz reference signal to counter.
	No count in either generator or exter-nal modes.	Time base dividers bad. Check X622 through X628, X624 or X625 bad. Check X615 through X620 for error.
	Wrong readout for known frequency input.	Check X615 through X620. Problem could be in readout circuit Check X609 through X614. Check X603 through X608.
	Wrong count in G/S mode.	No +11 V at Pin 14. X601 or X602 bad. X621 bad.

Table 6-2 (cont'd)

Section	Symptom	Possible Cause
Counter Operation (cont'd)	Segment of readout bad.	Check the respective driver X603 through X608.
	Display time control inoperative	CR603 bad. Q601 bad. Q602 bad.
Battery Charger	Battery does not maintain proper charge condition.	One or more cells of the battery bad. Q218, Q219, or Q220 bad. Q223 Regulator bad. CR207 or CR208 bad.
	Battery overheats during charging.	Charger not current limiting. Q218, Q219, or Q220 bad. Check CR205 through CR208.
Battery Timer	Timer will not start.	K201 bad. Check CR211 through CR213.
	Timer starts but turns off in a short time.	Q205 bad. Battery voltage low. CR211 bad. CR214 bad. Check Q201 through Q203.
	Timer will not manually turn off.	CR213 open.
	Low Voltage Cutoff inoperative.	Q204 bad.
	No pilot light.	Defective bulb. No 5 V applied to lamp.

Table 6-2 (cont'd)

Section	Symptom	Possible Cause
LOC DDM Sweep Generator	No LOC output with Sweep Switch (32AP) in OFF (0) position.	Q1401 bad. X1411 bad. Check input at pin 2 and pin 11 of X1411 for 90 Hz and 150 Hz, respectively.
	LOC Receiver indicates needle is not centered in AL or AR operation.	S1401-2 open or S1402-3 closed. X1405 bad. X1407 bad. Check output of X1441B at pin 1.
	LOC output does not sweep.	Check CLOCK input at X1405 pin 15. X1401 bad. X1405 bad.
	LOC sweep output is incorrect.	X1405 bad. X1402 or X1403 bad. Check operation of each portion of X1406, X1407, X1408, X1409. X1410 bad.

SECTION 7

7-1. Introduction.

7-2. This section is designed to aid the technician in trouble-shooting by providing pin-outs of the I.C.s used in the test set. Truth tables have also been supplied for some of the more functionally complex types of logic circuits. Positive logic is used throughout.

7-3. The following is a list of the symbols used in the truth tables and brief definitions of the symbols:

X - don't care, status of input irrelevant
S - output stays the same, doesn't change
H - high logic level
L - low logic level
↑ - transition from low to high logic level, positive edge triggering occurs
↓ - transition from high to low logic level, negative edge triggering occurs
U - unstable, this output will decay to another logic level.
Toggle - The outputs change to their complementary logic levels
- one high level pulse
 - one low level pulse

7-4. Types of Logic Gates.

7-5. Basically, there are eight types of logic gates: buffers, inverters, OR, NOR, XOR (exclusive OR), AND, NAND and the Data Selector.

7-6. The buffer is used to improve fanout, condition pulses, etc. The buffer is schematically represented as:

The truth table of the buffer is :

Input	Output
H	H
L	L

7-7. This inverter is similar to the buffer except that, the output is the logical complement of the input. The inverter is schematically represented as:

The truth table of the inverter is:

Input	Output
H	L
L	H

7-8. The OR gate performs the logical OR function. If any input goes high, the output is high. The output is low only when both inputs are low. The OR gate is represented schematically as:

The truth table of the OR gate is

Inputs		Output
1	2	
L	L	L
L	H	H
H	L	H
H	H	H

7-9. The NOR or $\overline{\text{OR}}$ gate performs the logical NOR function. If any input goes high, the output is low. The output is high only when both inputs are low. The NOR gate is represented schematically as:

The truth table of the NOR gate is:

Inputs		Output
1	2	
L	L	H
L	H	L
H	L	L
H	H	L

7-10. The output of the EXCLUSIVE OR or XOR gate goes high when one and only one of the inputs are high. The output of the XOR gate is low when both inputs are high. The XOR gate is represented schematically as:

The truth table of XOR gate is:

Inputs		Output
1	2	
L	L	L
L	H	H
H	L	H
H	H	L

7-11. The output of the AND gate goes high only when all of the inputs are high. The AND gate is represented schematically as:

The truth table of the AND gate is:

Inputs		Output
1	2	
L	L	L
L	H	L
H	L	L
H	H	H

7-12. The output of the NAND or $\overline{\text{AND}}$ gate goes low only when all of the inputs are high. The NAND gate is represented schematically as:

The truth table of the NAND gate is:

Inputs		Output
1	2	
L	L	H
L	H	H
H	L	H
H	H	L

7-13. The Data Selector can be considered as a solid state switch. The desired input(s) is chosen by activating the appropriate SELECT input(s). This enables data from the selected input(s) to be made available at the output pin(s) of the Data Selector.

INTEGRATED CIRCUIT GUIDE

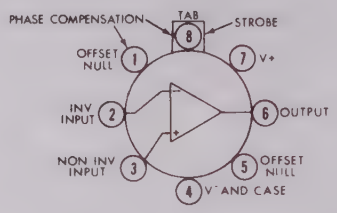

CA3130
OP. AMP.

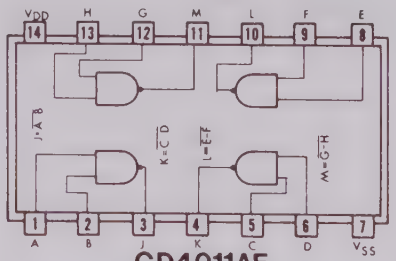

CD4011AE
COS/MOS
QUAD 2 INPUT NAND

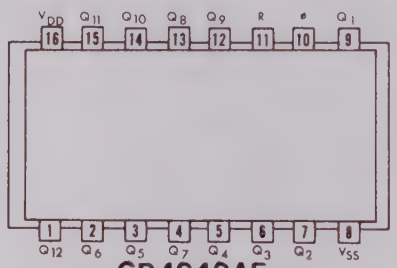

CD4040AE
RIPPLE BINARY
COUNTER/DIVIDER

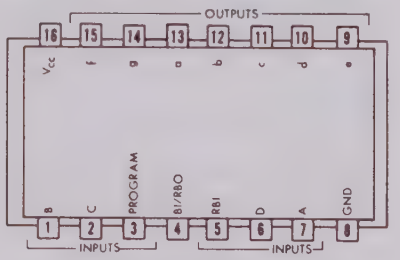

DD-700/DM8880
DECODER DRIVER

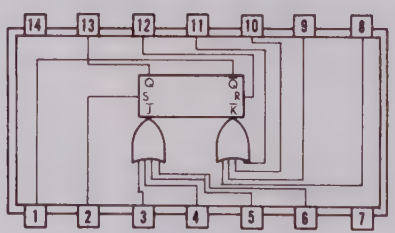

MC1027
AC-COUPLED J-K FLIP FLOP

R-S OPERATION

R	S	Q^{n+1}
0	1	1
1	0	0
0	0	Q^n
1	1	N.D.

All J-K inputs are static
N.D. = Not defined

CLOCKED J-K OPERATION

$\overline{J}$	$\overline{K}$	C_D	Q^n
ø	ø	⌐	Q^n
0	0	⌐	$\overline{Q}$
0	1	⌐	1
1	0	⌐	0
1	1	⌐	Q^n

ø = Don't Care

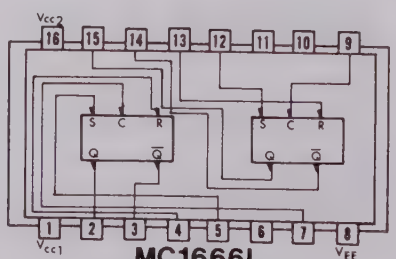

MC1666L
DUAL CLOCKED R-S
FLIP FLOP

S	R	C	Q_{n+1}
ø	ø	0	Q_n
0	0	1	Q_n
1	0	1	1
0	1	1	0
1	1	1	N.D.

ø = Don't Care
N.D. = Not Defined

INTEGRATED CIRCUIT GUIDE

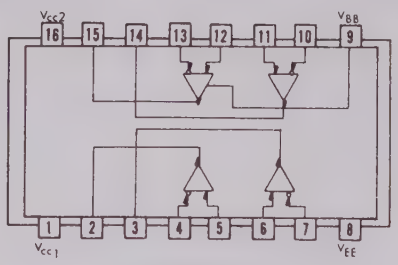

MC1692L
QUAD LINE RECEIVER

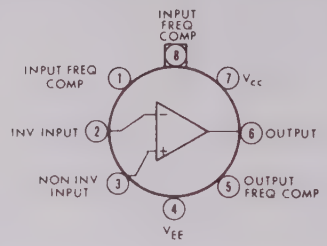

MC1709CG/LM709H
OP. AMP.

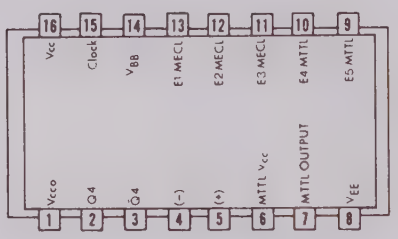

MC12013
TWO-MODULUS PRESCALER

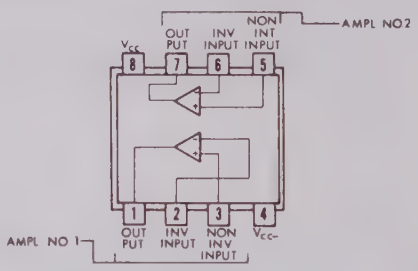

SN72558/MC1458
OP. AMP.

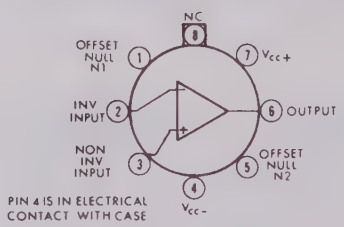

SN72741
OP. AMP.

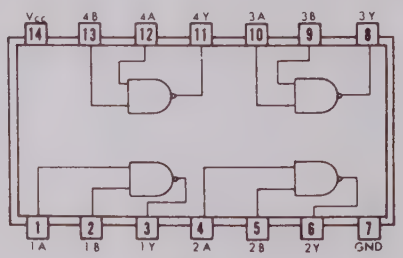

7400
2 INPUT NAND GATE

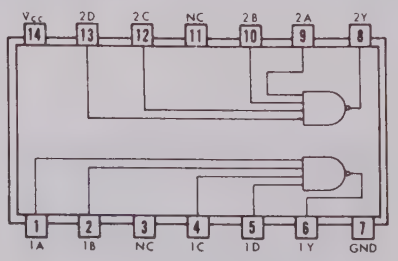

SN7420
QUAD INPUT NAND

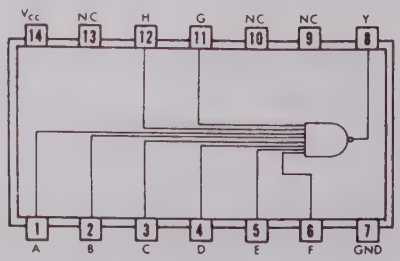

SN7430
8 INPUT POSITIVE NAND GATE

INTEGRATED CIRCUIT GUIDE

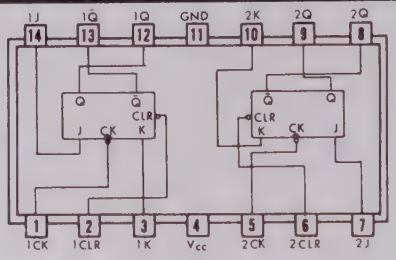

7473
DUAL J-K FLIP-FLOP

INPUTS				OUTPUTS	
CLEAR	CLOCK	J	K	Q	$\bar{Q}$
L	X	X	X	L	H
H	⎍	L	L	S	S
H	⎍	H	L	H	L
H	⎍	L	H	L	H
H	⎍	H	H	TOGGLE	

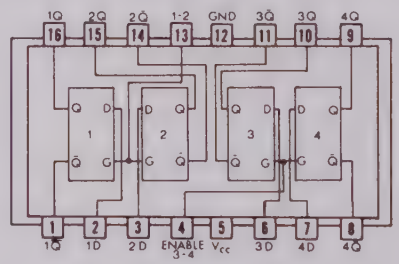

7475
4-BIT LATCH

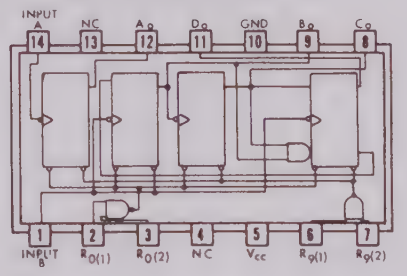

7490
DECODER COUNTER

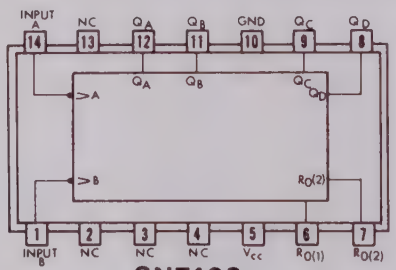

SN7492
DIVIDE-BY-TWELVE
COUNTER

COUNT SEQUENCE

COUNT	OUTPUT Q_D	Q_C	Q_B	Q_A
0	L	L	L	L
1	L	L	L	H
2	L	L	H	L
3	L	L	H	H
4	L	H	L	L
5	L	H	L	H
6	H	L	L	L
7	H	L	L	H
8	H	L	H	L
9	H	L	H	H
10	H	H	L	L
11	H	H	L	H

RESET/COUNT FUNCTION TABLE

RESET INPUTS		OUTPUTS			
$R_{O(1)}$	$R_{O(2)}$	Q_D	Q_C	Q_B	Q_A
H	H	L	L	L	L
L	X	COUNT			
X	L	COUNT			

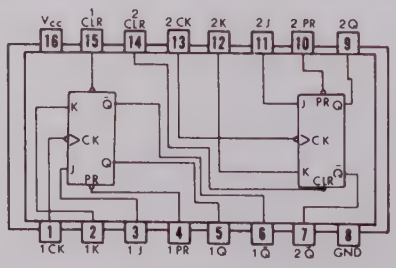

74S112
DUAL J-K FLIP-FLOP

INPUTS					OUTPUTS	
PRESET	CLEAR	CLOCK	J	K	Q	$\bar{Q}$
L	H	X	X	X	H	L
H	L	X	X	X	L	H
L	L	X	X	X	U	U
H	H	⎍	L	L	S	S
H	H	⎍	H	L	H	L
H	H	⎍	L	H	L	H
H	H	⎍	L	H	L	H
H	H	⎍	H	H	TOGGLE	
H	H	H	X	X	S	S

INTEGRATED CIRCUIT GUIDE

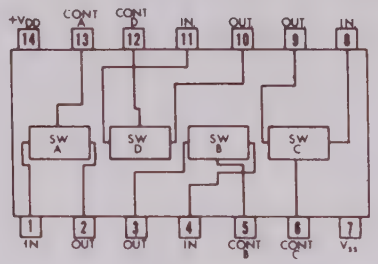

CD4016
QUAD CMOS ANALOG SWITCH

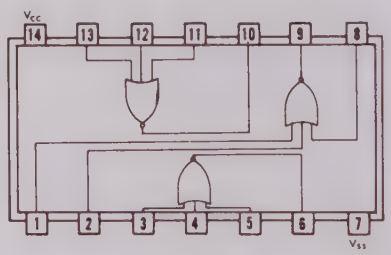

CD4025
TRIPLE 3-INPUT NOR GATE

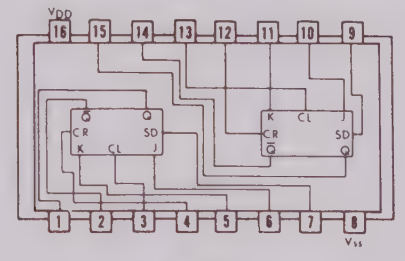

4027A
DUAL JK FLIP-FLOP

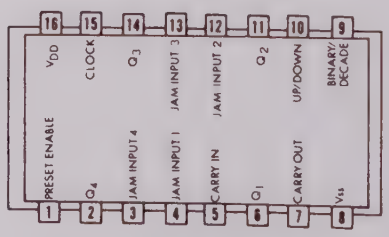

CD4029AE
UP/DOWN COUNTER

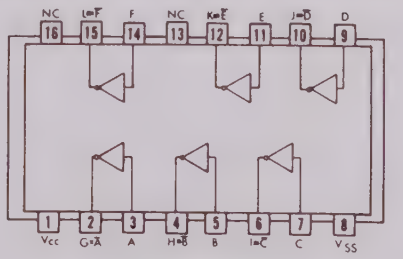

CD4049AE
HEX BUFFER/CONVERTER

NAV-402AP
TABLE OF CONTENTS
SCHEMATICS

SECTION 8

Figure		Page
8-1AP	Interconnect Diagram (Eff: thru S/N 227)	8-1AP
8-1-1AP	Interconnect Diagram (Eff: S/N 228 & on)	8-2AP
8-2	Bearing Check Board Parts Layout	8-3
8-3	Bearing Check Board Schematic	8-5
8-4	Regulator-Timer Board Parts Layout	8-7
8-5	Regulator-Timer Board Schematic	8-9
8-6	Combination Sine Board Parts Layout	8-11
8-7	Combination Sine Board Schematic	8-13
8-8	30 Hz Sine Board Parts Layout	8-15
8-9	30 Hz Sine Board Schematic	8-17
8-10	VOR Bearing Logic Board Parts Layout	8-19
8-11	VOR Bearing Logic Schematic	8-21
8-12	Counter Board Parts Layout	8-23
8-13	Counter Schematic	8-25
8-14	High Voltage Power Supply Board Parts Layout	8-27
8-15	High Voltage Power Supply Schematic	8-29
8-16	Buffer Amp Board Parts Layout	8-31
8-17	Buffer Amp Schematic	8-33
8-18	Prescaler Schematic (401L Eff: to S/N 2215, 2218 thru 2271. 402AP Eff: thru S/N 227)	8-35
8-19	Prescaler Board Parts Layout (401L Eff: S/N 2215 thru 2217, 2272 & on. 402AP Eff: S/N 228 & on)	8-37
8-20	Prescaler Schematic (401L Eff: S/N 2215 thru 2217, 2272 & on. 402AP Eff: S/N 228 & on)	8-39
8-21	Phase Lock/Power Monitor Board Parts Layout	8-41
8-22	Phase Lock/Power Monitor Schematic	8-43
8-23AP	Oscillator Boards Parts Layouts	8-45AP
8-24AP	Oscillator Schematic	8-47AP
8-25	Transmitter, Modulator & Tripler Boards Parts Layout	8-48
8-26	Modulator PA & Attenuator Assembly Schematic	8-49
8-27AP	Localizer Transmitter Board Parts Layout	8-51AP
8-28AP	Dual Localizer Transmitter Schematic	8-53AP
8-29	5 Volt Regulator Parts Layout	8-55
8-30	5 Volt Regulator Schematic	8-57
8-31	AC Power Supply Parts Layout	8-59
8-32AP	AC Power Supply Schematic	8-61AP
8-33	Bearing Correction Circuit Schematic (Installed at Manufacturer's Option)	8-63
8-34AP	AC Power Cord NAV-402AP	8-65AP
8-35AP	Auto Pilot Sweep Generator Parts Layout	8-67AP
8-36AP	Auto Pilot Sweep Generator Schematic	8-69AP

NAV-402AP
TABLE OF CONTENTS
PARTS LIST

SECTION IX		Page
9-1	Introduction	9-1
9-3AP	Front Panel Assembly	9-3AP
9-4AP	Digital Counter Assembly	9-7AP
9-5AP	· Counter Board Assembly	9-9AP
9-6	· High Voltage Power Supply	9-11
9-7AP	Power Supply Assembly	9-13AP
9-8	PC Card Cage Assembly	9-15
9-9	· Bearing Check Board Assembly (PC-1)	9-17
9-10	· Regulator/Timer Board Assembly (PC-2)	9-19
9-11	· Combination Sine Board Assembly (PC-3)	9-21
9-12	. 30Hz Sine Board Assembly (PC-4)	9-23
9-13	· VOR Bearing Logic Board Assembly (PC-5)	9-25
9-14	5 Volt Regulator Assembly	9-27
9-15-1	Prescaler Assembly (Eff: to S/N 228)	9-29
9-15-2	(Eff: S/N 228 and on)	9-31
9-16AP	Oscillator Assembly	9-33AP
9-17	Phase-Lock Range Extender	9-35
9-18	Buffer Amp Assembly	9-37
9-19	Phase-Lock Power Monitor Assembly	9-39
9-20AP	Attenuator/Transmitter Assembly	9-41AP
9-21-1AP	Dual Localizer Assembly	9-45AP
9-21-2AP	· Dual Localizer/Transmitter Board	9-46AP
9-22	Diode Protect Block Assembly	9-47
9-23	160 MHz Low-Pass Filter Assembly	9-49
9-24	RF Cable Assemblies	9-51
9-25AP	Case Assembly	9-53AP
9-26AP	Autopilot Sweep Generator Board	9-55AP

NAV-402AP
TABLE OF CONTENTS
MECHANICAL

SECTION 10

Table		Page
10-1AP	Mechanical Breakdown	10-5AP

Figure		Page
10-1AP	Mechanical Breakdown	10-1AP
10-1-1AP	Mechanical Breakdown Detail Views	10-3AP
10-2AP	Rear View of Front Panel	10-6AP

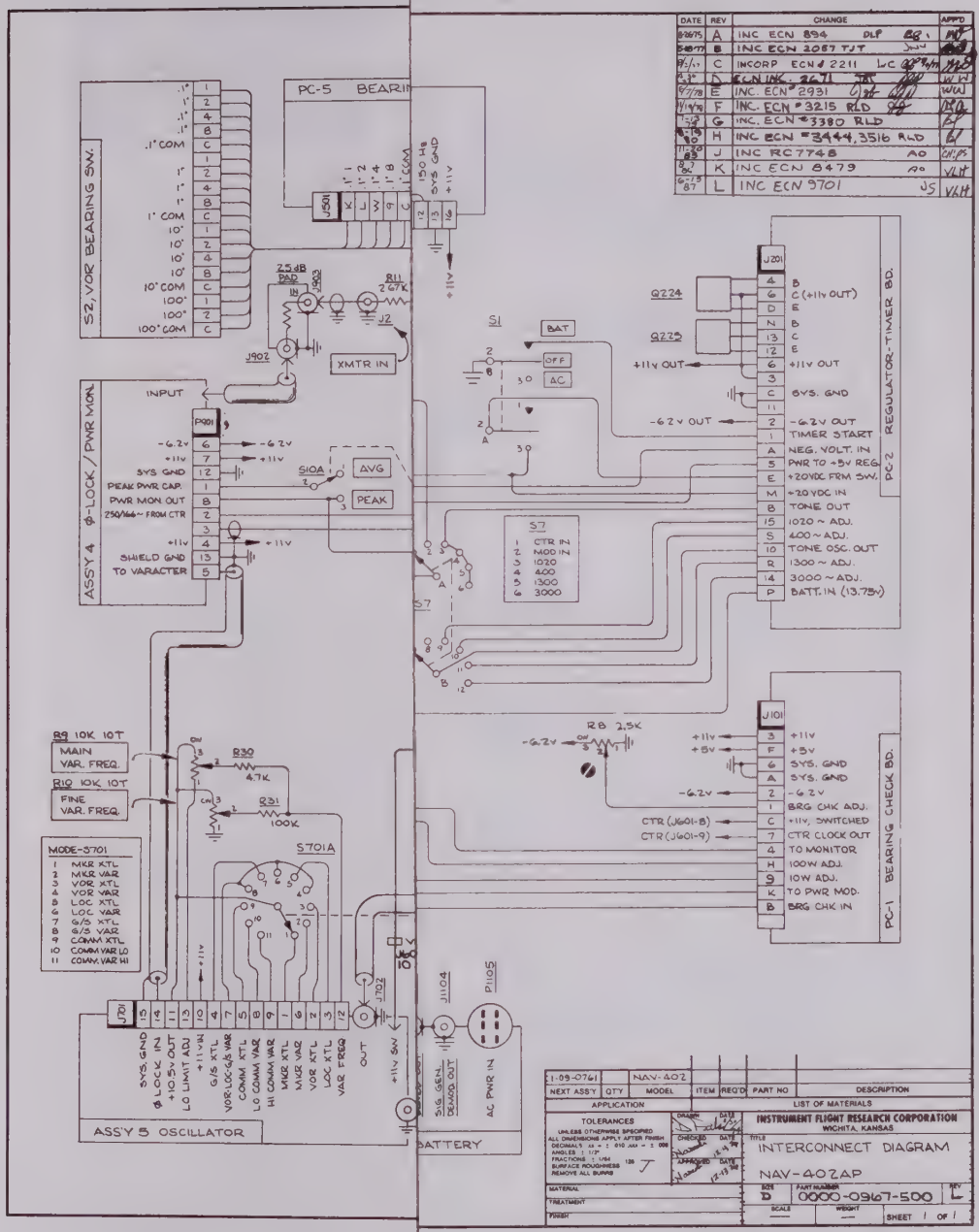
DATE REV CHANGE APP'D
A INC ECN 894 DLF
B INC ECN 2087 TJT
C INCORP ECN # 2211
D ECN INK. 2671
E INC. ECN # 2931
F INC. ECN # 3215 RLD
G INC. ECN # 3380 RLD
H INC ECN # 3444, 3516 RLD
J INC RC 7748 AO
K INC ECN 8479 AO
L INC ECN 9701 JS
S2, VOR BEARING SW.
PC-5 BEARI
J501
SYS GND
+11V
25dB PAD
J902
R11 2.67K
J2
XMTR IN
ASSY 4 Φ-LOCK / PWR MON.
INPUT
P901
-6.2V
+11V
SYS GND
PEAK PWR CAP.
PWR MON OUT
250/166~ FROM CTR
SHIELD GND TO VARACTER
S10A
AVG
PEAK
S1
BAT
OFF
AC
S7
CTR IN
MOD IN
1020
400
1300
3000
J201
Q224
Q225
+11V OUT
-6.2V OUT
TIMER START
NEG. VOLT. IN
PWR TO +5V REG.
+20VDC FRM SW.
+20 VDC IN
TONE OUT
1020 ~ ADJ.
400 ~ ADJ.
TONE OSC. OUT
1300 ~ ADJ.
3000 ~ ADJ.
BATT. IN (13.75V)
PC-2 REGULATOR-TIMER BD.
R9 10K 10T
MAIN VAR. FREQ.
R10 10K 10T
FINE VAR. FREQ.
R30 4.7K
R31 100K
R8 2.5K
MODE-S701
MKR XTL
MKR VAR
VOR XTL
VOR VAR
LOC XTL
LOC VAR
G/S XTL
G/S VAR
COMM XTL
COMM VAR LO
COMM VAR HI
S701A
J101
+11V
+5V
SYS. GND
-6.2V
BRG CHK ADJ.
+11V, SWITCHED
CTR CLOCK OUT
TO MONITOR
100W ADJ.
10W ADJ.
TO PWR MOD.
BRG CHK IN
CTR (J601-B)
CTR (J601-9)
PC-1 BEARING CHECK BD.
J701
SYS GND
Φ LOCK IN
+10.5V OUT
LO LIMIT ADJ
+11V IN
G/S XTL
VOR/LOC/G/S VAR
COMM XTL
LO COMM VAR
HI COMM VAR
MKR XTL
MKR VAR
VOR XTL
LOC XTL
VAR FREQ
OUT
+11V SW
J702
J1104
P1105
SIG GEN. DEMOD OUT
AC PWR IN
ASSY 5 OSCILLATOR
BATTERY
11-09-0761 NAV-402
NEXT ASSY QTY MODEL ITEM REQ'D PART NO DESCRIPTION
APPLICATION
LIST OF MATERIALS
TOLERANCES
INSTRUMENT FLIGHT RESEARCH CORPORATION
WICHITA, KANSAS
TITLE
INTERCONNECT DIAGRAM
NAV-402AP
SIZE D
PART NUMBER 0000-0967-500
REV L
MATERIAL
TREATMENT
FINISH
SCALE
WEIGHT
SHEET 1 OF 1

Fig. 8-1

PC-5 BEARING LOGIC BD.
ASSY 8 COUNTER
S2, VOR BEARING SW.
ASSY 4 Φ-LOCK / PWR MON.
INPUT
XMTR IN
MOD IN CTR IN
TO
FROM
AVG
PEAK
OFF
LOC ON
TUNE
MAIN VAR. FREQ.
FINE VAR. FREQ.
R30 4.7K
R31 100K
MODE-3701
S701A
S701B
S701C
ASSY 5 OSCILLATOR
ASSY 6 MOD & PWR AMP.
ASSY 7 DUAL LOC XMTR
PC-4 30 Hz SINE BD
J5 +11V A-100 OPTION
G/S DDM

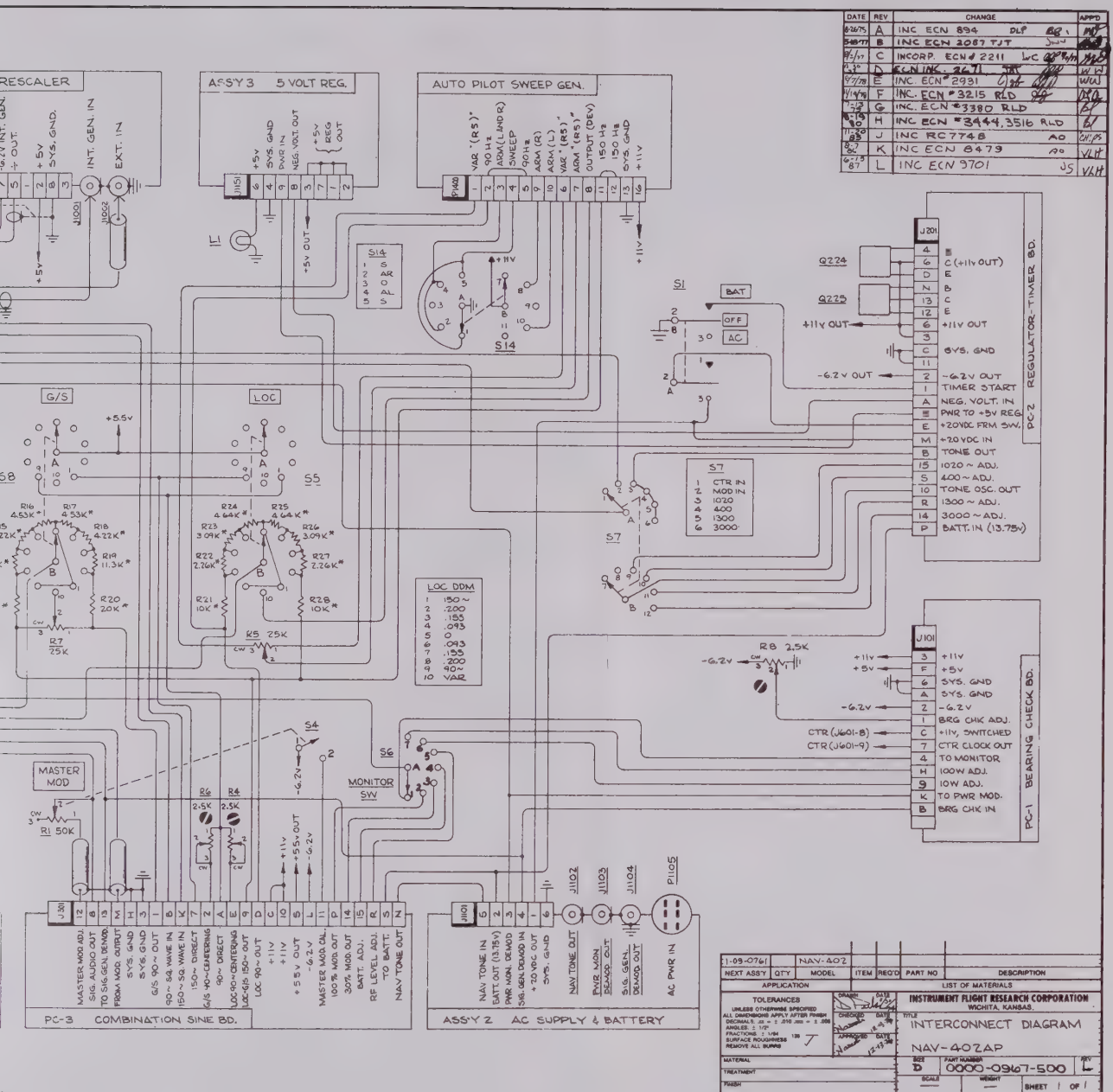
RESCALER
ASS'Y 3 5 VOLT REG.
AUTO PILOT SWEEP GEN.
G/S
LOC
MASTER MOD
MONITOR SW
LOC DDM
PC-3 COMBINATION SINE BD.
ASS'Y 2 AC SUPPLY & BATTERY
PC-2 REGULATOR-TIMER BD.
PC-1 BEARING CHECK BD.
INSTRUMENT FLIGHT RESEARCH CORPORATION
WICHITA, KANSAS.
INTERCONNECT DIAGRAM
NAV-402AP
0000-0967-500
SHEET 1 OF 1

Fig. 8-1

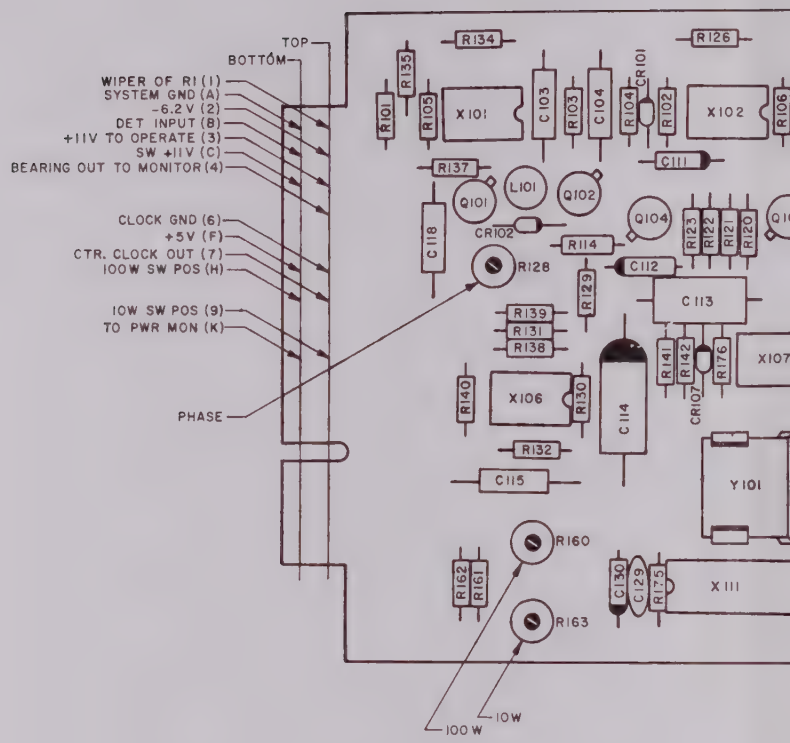
TOP
BOTTOM
WIPER OF R1 (1)
SYSTEM GND (A)
-6.2 V (2)
DET. INPUT (B)
+11V TO OPERATE (3)
SW +11V (C)
BEARING OUT TO MONITOR (4)
CLOCK GND (6)
+5V (F)
CTR. CLOCK OUT (7)
100W SW POS (H)
10W SW POS (9)
TO PWR MON (K)
PHASE
100 W
10W
R134
R126
R135
R101
R105
X101
C103
R103
C104
R104
CR101
R102
X102
R106
C111
R137
Q101
L101
Q102
C118
CR102
Q104
R123
R122
R121
R120
R114
R128
C112
R129
C113
R139
R131
R138
R141
R142
R176
X107
R140
X106
R130
C114
CR107
R132
C115
Y101
R160
R162
R161
C130
C129
R175
X111
R163

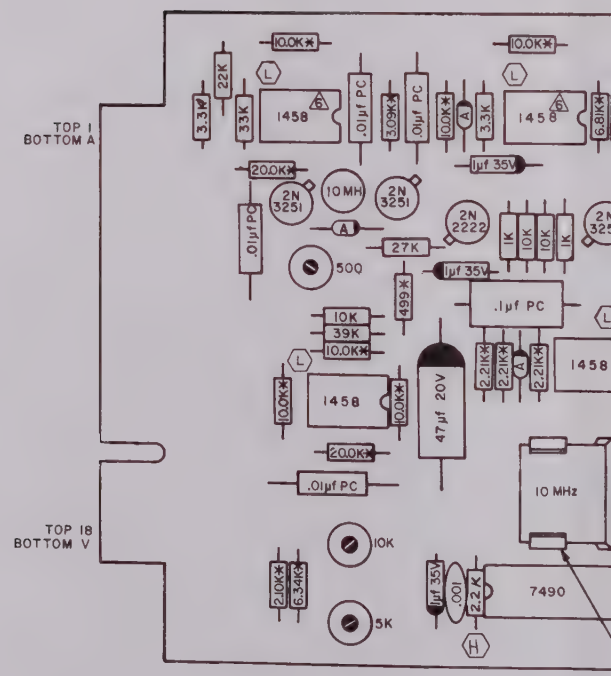
TOP 1
BOTTOM A
TOP 18
BOTTOM V
10.0K*
22K
3.3M*
33K
1458
.01µf PC
3.09K*
.01µf PC
10.0K*
3.3K
1458
6.81K*
1µf 35V
20.0K*
2N 3251
10 MH
2N 3251
2N 2222
1K
10K
1K
.01µf PC
27K
500
1µf 35V
499*
.1µf PC
10K
39K
10.0K*
2.21K*
2.21K*
2.21K*
1458
10.0K*
1458
10.0K*
47µf 20V
20.0K*
.01µf PC
10 MHz
10K
2.0K*
6.34K*
5K
1µf 35V
.001
2.2K
7490

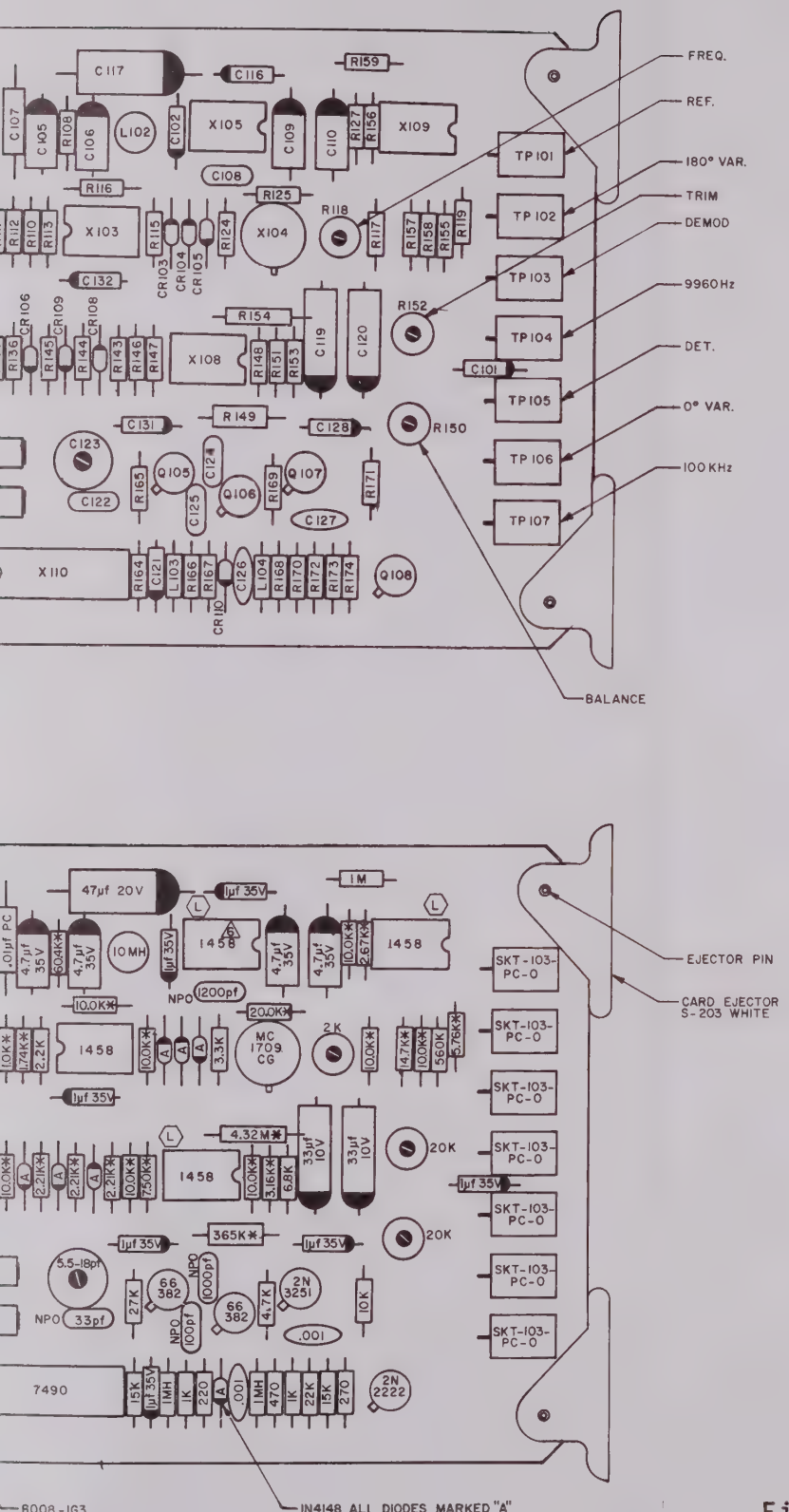

Fig. 8-2 BEARING CHECK BOARD PARTS LAYOUT (7010-0969-600 L)

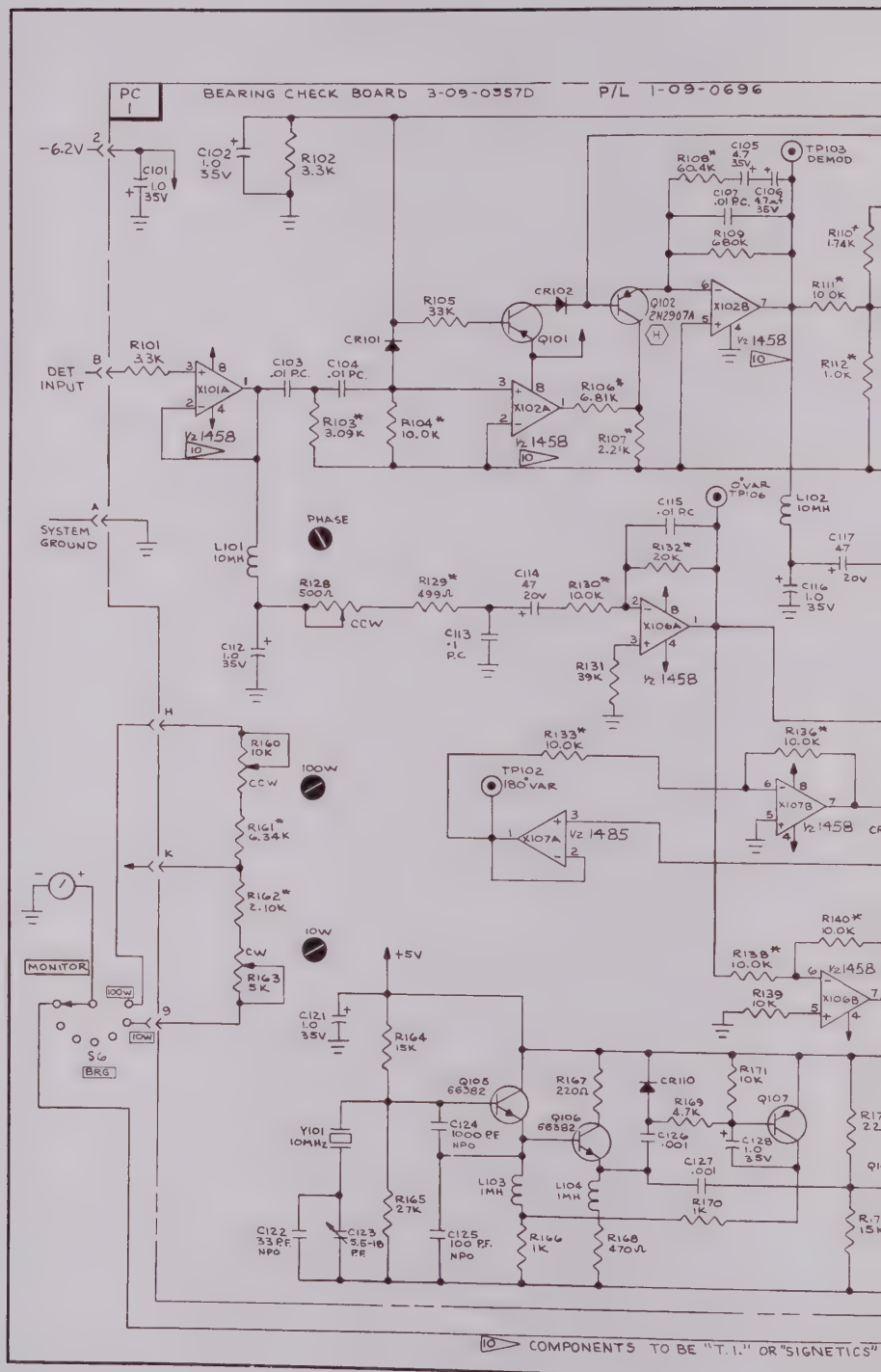
PC 1
BEARING CHECK BOARD 3-09-0357D
P/L 1-09-0696
-6.2V
C101 1.0 35V
C102 1.0 35V
R102 3.3K
R101 3.3K
DET INPUT
SYSTEM GROUND
X101A
½ 1458
C103 .01 P.C.
C104 .01 PC.
R103* 3.09K
R104* 10.0K
CR101
CR102
R105 33K
Q101
Q102 2N2907A
X102A
½ 1458
R106* 6.81K
R107 2.21K
X102B
½ 1458
R108* 60.4K
C105 4.7 35V
TP103 DEMOD
C107 .01 PC.
C106 47 35V
R109 680K
R110* 1.74K
R111* 10.0K
R112* 1.0K
0°VAR TP106
C115 .01 PC
L102 10MH
C117 47 20V
C116 1.0 35V
PHASE
L101 10MH
R128 500Ω
CCW
R129* 499Ω
C114 47 20V
R130* 10.0K
C113 .1 P.C.
C112 1.0 35V
X106A
½ 1458
R131 39K
R132* 20K
R133* 10.0K
TP102 180°VAR
X107A
½ 1485
R136* 10.0K
X107B
½ 1458
R140* 10.0K
R138* 10.0K
R139 10K
X106B
½ 1458
H
K
9
R160 10K
CCW
100W
R161* 6.34K
R162* 2.10K
CW
10W
R163 5K
MONITOR
100W
10W
S6 BRG
+5V
C121 1.0 35V
R164 15K
Q105 66382
Q106 66382
Y101 10MHz
C124 1000 PF NPO
C122 33 P.F. NPO
C123 3.5-18 P.F.
R165 2.7K
C125 100 P.F. NPO
L103 1MH
L104 1MH
R166 1K
R168 470Ω
R167 220Ω
CR110
R169 4.7K
C126 .001
C127 .001
R170 1K
R171 10K
Q107
C128 1.0 35V
10 COMPONENTS TO BE "T.I." OR "SIGNETICS"

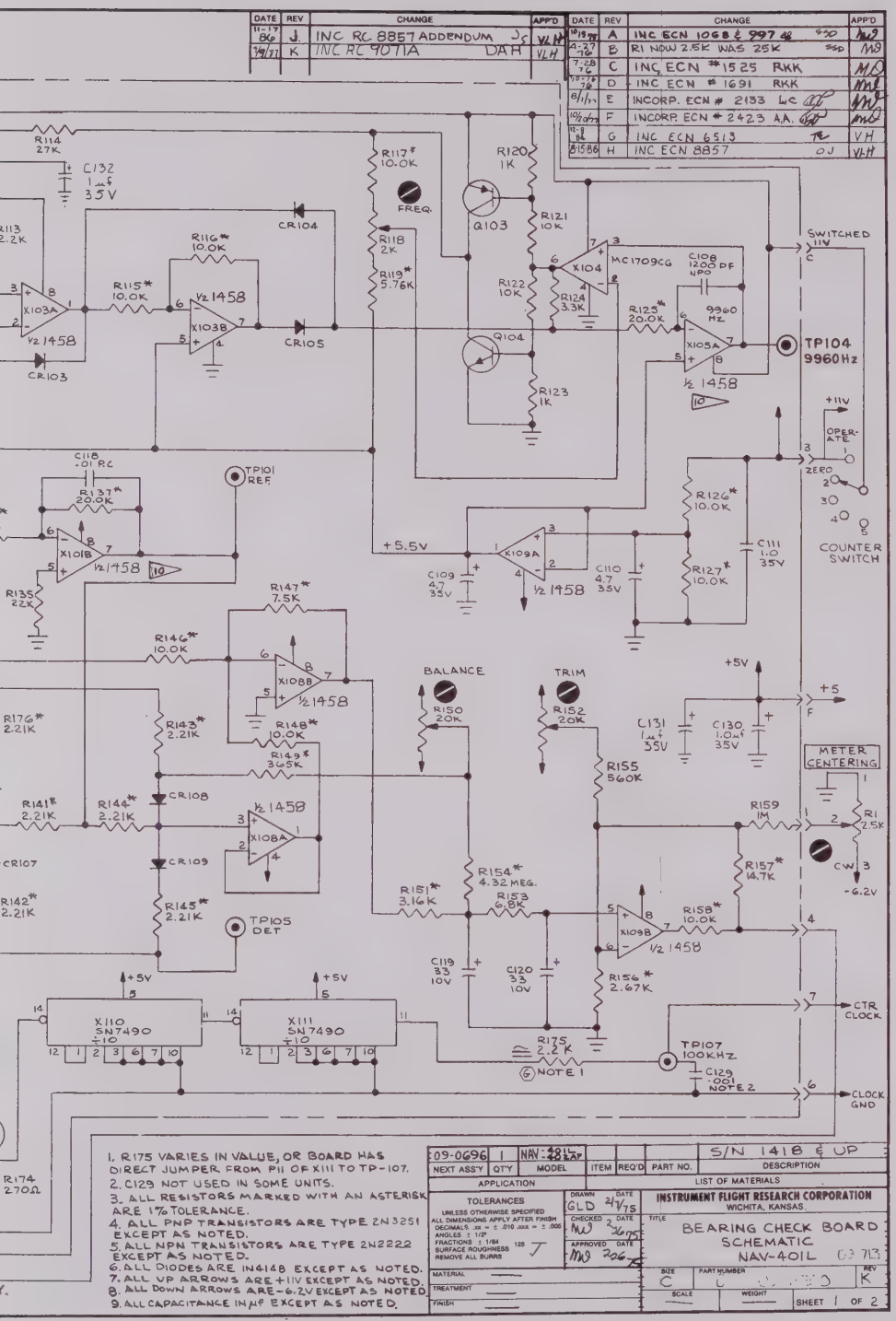
DATE | REV | CHANGE | APP'D
11-19-80 | J | INC RC 8857 ADDENDUM | VLH
4/9/81 | K | INC RC 9071A DAH | VLH
DATE | REV | CHANGE | APP'D
10-19-76 | A | INC ECN 1068 & 997 AB | SSD
4-27-76 | B | R1 NOW 2.5K WAS 25K | SSD
7-28-76 | C | INC ECN # 1525 RKK
7-27-76 | D | INC ECN # 1691 RKK
8-11-77 | E | INCORP. ECN # 2133 LC
10-20-77 | F | INCORP. ECN # 2423 AA
12-8-80 | G | INC ECN 6513
5-15-86 | H | INC ECN 8857 OJ
R114 27K
C132 1μf 35V
CR104
R116* 10.0K
R115* 10.0K
X103A
½ 1458
X103B
CR105
CR103
R117* 10.0K
FREQ.
R118 2K
R119* 5.76K
R120 1K
Q103
R121 10K
R122 10K
R124 3.3K
X104 MC1709CG
C108 1200 PF NPO
R123* 20.0K
9960 HZ
X105A
½ 1458
Q104
R123 1K
SWITCHED 11V
TP104 9960Hz
+11V
OPERATE
ZERO
COUNTER SWITCH
C118 .01 RC
R137* 20.0K
TP101 REF
X101B
½ 1458
R135 22K
+5.5V
C109 4.7 35V
X109A
½ 1458
C110 4.7 35V
R126* 10.0K
C111 1.0 35V
R127* 10.0K
R147* 7.5K
R146* 10.0K
X108B
½ 1458
BALANCE
R150 20K
TRIM
R152 20K
+5V
C131 1μf 35V
C130 1.0μf 35V
+5
METER CENTERING
R176* 2.21K
R143* 2.21K
R148* 10.0K
R149* 36.5K
R155 560K
R159 1M
R1 2.5K
CW
-6.2V
R141* 2.21K
R144* 2.21K
CR108
½ 1458
X108A
CR107
CR109
R157* 14.7K
R154* 4.32 MEG.
R153 6.8K
R151* 3.16K
X109B
½ 1458
R158* 10.0K
R142* 2.21K
R145* 2.21K
TP105 DET
C119 33 10V
C120 33 10V
R156* 2.67K
+5V
X110 SN7490 ÷10
X111 SN7490 ÷10
CTR CLOCK
R175 2.2K
NOTE 1
TP107 100KHz
C129 .001 NOTE 2
CLOCK GND
R174 270Ω
1. R175 VARIES IN VALUE, OR BOARD HAS DIRECT JUMPER FROM P11 OF X111 TO TP-107.
2. C129 NOT USED IN SOME UNITS.
3. ALL RESISTORS MARKED WITH AN ASTERISK ARE 1% TOLERANCE.
4. ALL PNP TRANSISTORS ARE TYPE 2N3251 EXCEPT AS NOTED.
5. ALL NPN TRANSISTORS ARE TYPE 2N2222 EXCEPT AS NOTED.
6. ALL DIODES ARE IN4148 EXCEPT AS NOTED.
7. ALL VP ARROWS ARE +11V EXCEPT AS NOTED.
8. ALL DOWN ARROWS ARE -6.2V EXCEPT AS NOTED.
9. ALL CAPACITANCE IN μF EXCEPT AS NOTED.
09-0696 | 1 | NAV-401L
NEXT ASSY | QTY | MODEL | ITEM | REQ'D | PART NO. | DESCRIPTION
S/N 1418 & UP
APPLICATION
LIST OF MATERIALS
TOLERANCES
UNLESS OTHERWISE SPECIFIED
ALL DIMENSIONS APPLY AFTER FINISH
DECIMALS .xx = ± .010 .xxx = ± .005
ANGLES ± 1/2°
FRACTIONS ± 1/64
SURFACE ROUGHNESS 125
REMOVE ALL BURRS
DRAWN GLD 2/4/75
CHECKED NW 2/6/75
APPROVED MD 2/6/75
INSTRUMENT FLIGHT RESEARCH CORPORATION
WICHITA, KANSAS.
TITLE
BEARING CHECK BOARD SCHEMATIC NAV-401L
03-713
MATERIAL
TREATMENT
FINISH
SIZE C
PART NUMBER
REV K
SCALE
WEIGHT
SHEET 1 OF 2

Fig. 8-3

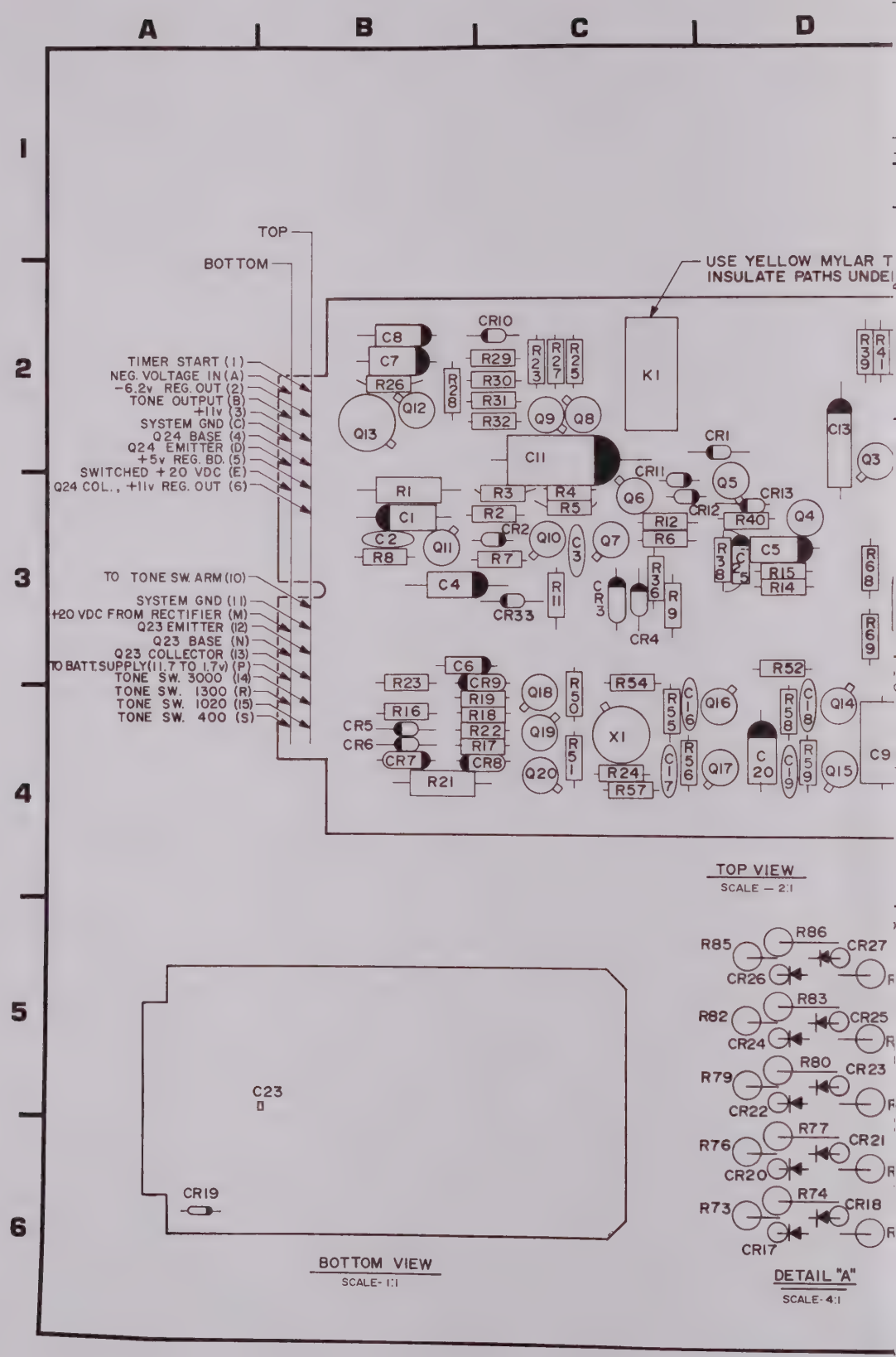
A
B
C
D
1
2
3
4
5
6
TOP
BOTTOM
USE YELLOW MYLAR T
INSULATE PATHS UNDE
TIMER START (1)
NEG. VOLTAGE IN (A)
-6.2v REG. OUT (2)
TONE OUTPUT (B)
+11v (3)
SYSTEM GND (C)
Q24 BASE (4)
Q24 EMITTER (D)
+5v REG. BD. (5)
SWITCHED +20 VDC (E)
Q24 COL., +11v REG. OUT (6)
TO TONE SW. ARM (10)
SYSTEM GND (11)
+20 VDC FROM RECTIFIER (M)
Q23 EMITTER (12)
Q23 BASE (N)
Q23 COLLECTOR (13)
TO BATT. SUPPLY (11.7 TO 1.7v) (P)
TONE SW. 3000 (14)
TONE SW. 1300 (R)
TONE SW. 1020 (15)
TONE SW. 400 (S)
C8
C7
R26
Q12
Q13
CR10
R29
R30
R31
R32
R28
R23
R27
R25
Q9
Q8
K1
C11
CR1
Q5
CR11
Q6
CR12
CR13
R40
Q4
C13
Q3
R1
C1
C2
R8
Q11
R3
R2
R4
R5
CR2
Q10
R7
Q7
R12
R6
C3
C4
CR33
R11
CR3
R36
R9
CR4
C5
R15
R14
R38
C25
R68
R69
R39
R41
C6
R23
CR9
R19
R18
R22
R17
CR8
R16
CR5
CR6
CR7
R21
Q18
Q19
Q20
R50
R51
R54
X1
R24
R57
R55
C16
R56
C17
Q16
Q17
R52
C20
R58
C18
C19
R59
Q14
Q15
C9
TOP VIEW
SCALE — 2:1
C23
CR19
BOTTOM VIEW
SCALE- 1:1
R85
R86
CR27
CR26
R82
R83
CR25
CR24
R79
R80
CR23
CR22
R76
R77
CR21
CR20
R73
R74
CR18
CR17
DETAIL "A"
SCALE- 4:1

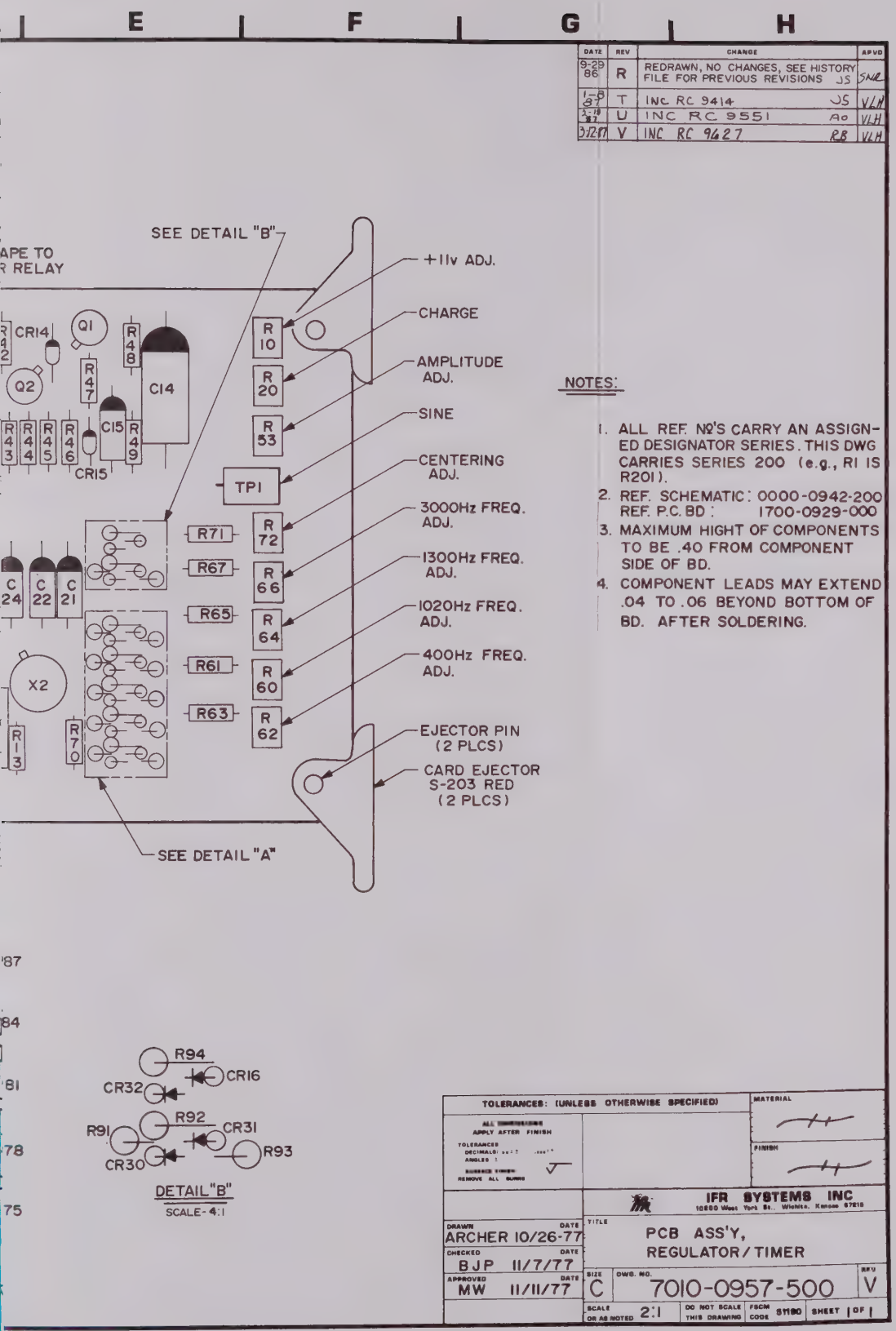
E
F
G
H
DATE
REV
CHANGE
APVD
9-29-86 R REDRAWN, NO CHANGES, SEE HISTORY FILE FOR PREVIOUS REVISIONS JS SNR
1-8-87 T INC RC 9414 JS VLH
2-19-87 U INC RC 9551 AO VLH
3-27-87 V INC RC 9627 RB VLH
SEE DETAIL "B"
+11v ADJ.
CHARGE
AMPLITUDE ADJ.
SINE
CENTERING ADJ.
3000Hz FREQ. ADJ.
1300Hz FREQ. ADJ.
1020Hz FREQ. ADJ.
400Hz FREQ. ADJ.
EJECTOR PIN (2 PLCS)
CARD EJECTOR S-203 RED (2 PLCS)
SEE DETAIL "A"
R10
R20
R53
TP1
R72
R66
R64
R60
R62
R71
R67
R65
R61
R63
Q1
Q2
CR14
CR15
C14
C15
C24
C22
C21
X2
R70
R13
R94
CR16
CR32
R92
CR31
R91
R93
CR30
DETAIL "B"
SCALE-4:1
NOTES:
1. ALL REF. Nº'S CARRY AN ASSIGNED DESIGNATOR SERIES. THIS DWG CARRIES SERIES 200 (e.g., R1 IS R201).
2. REF. SCHEMATIC: 0000-0942-200
REF. P.C. BD: 1700-0929-000
3. MAXIMUM HIGHT OF COMPONENTS TO BE .40 FROM COMPONENT SIDE OF BD.
4. COMPONENT LEADS MAY EXTEND .04 TO .06 BEYOND BOTTOM OF BD. AFTER SOLDERING.
TOLERANCES: (UNLESS OTHERWISE SPECIFIED)
MATERIAL
FINISH
IFR SYSTEMS INC
DRAWN ARCHER 10/26-77
CHECKED BJP 11/7/77
APPROVED MW 11/11/77
TITLE PCB ASS'Y, REGULATOR/TIMER
SIZE C
DWG. NO. 7010-0957-500
REV V
SCALE 2:1
SHEET 1 OF 1

Fig. 8-4

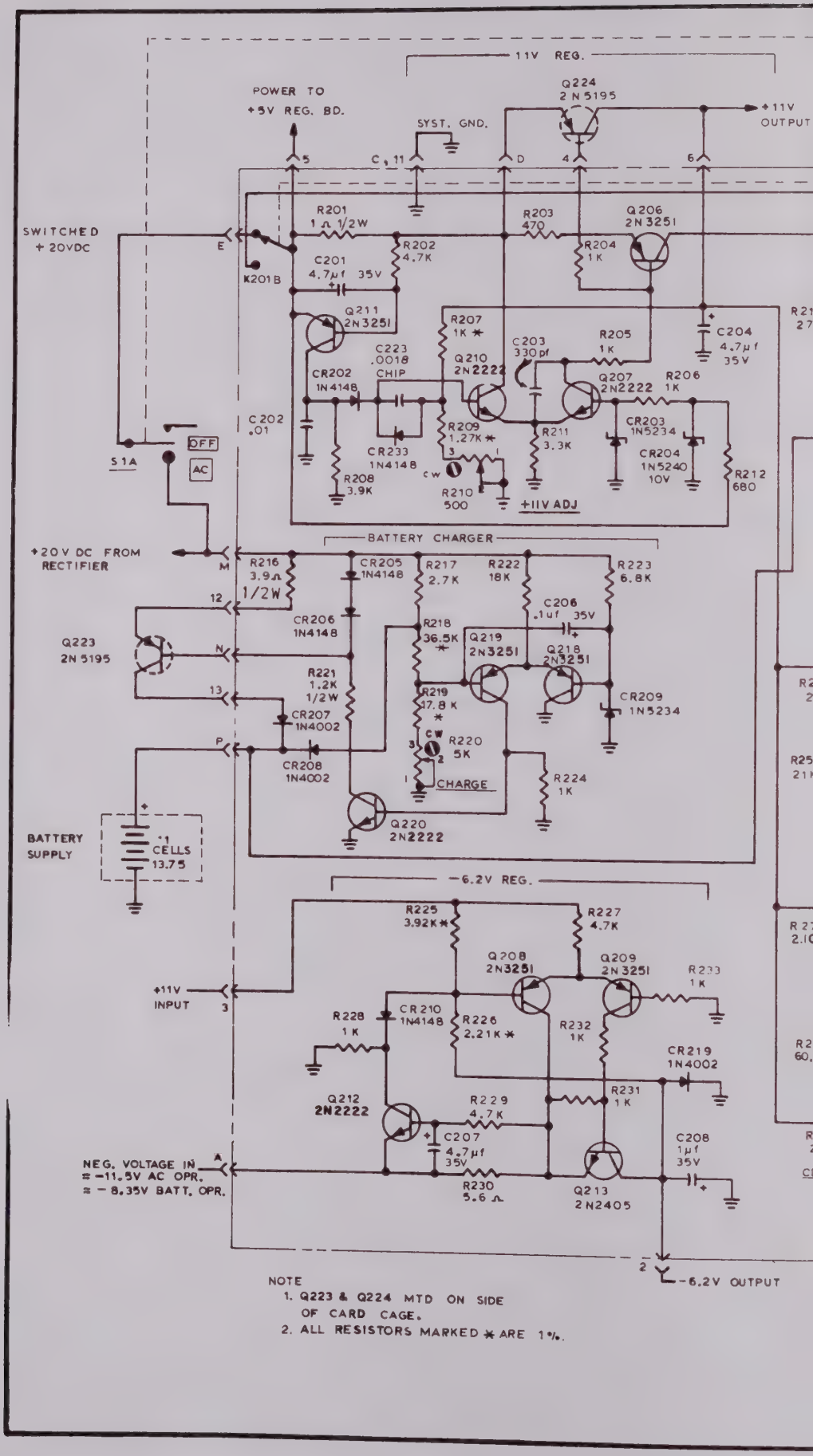

NOTE
1. Q223 & Q224 MTD ON SIDE OF CARD CAGE.
2. ALL RESISTORS MARKED * ARE 1%.

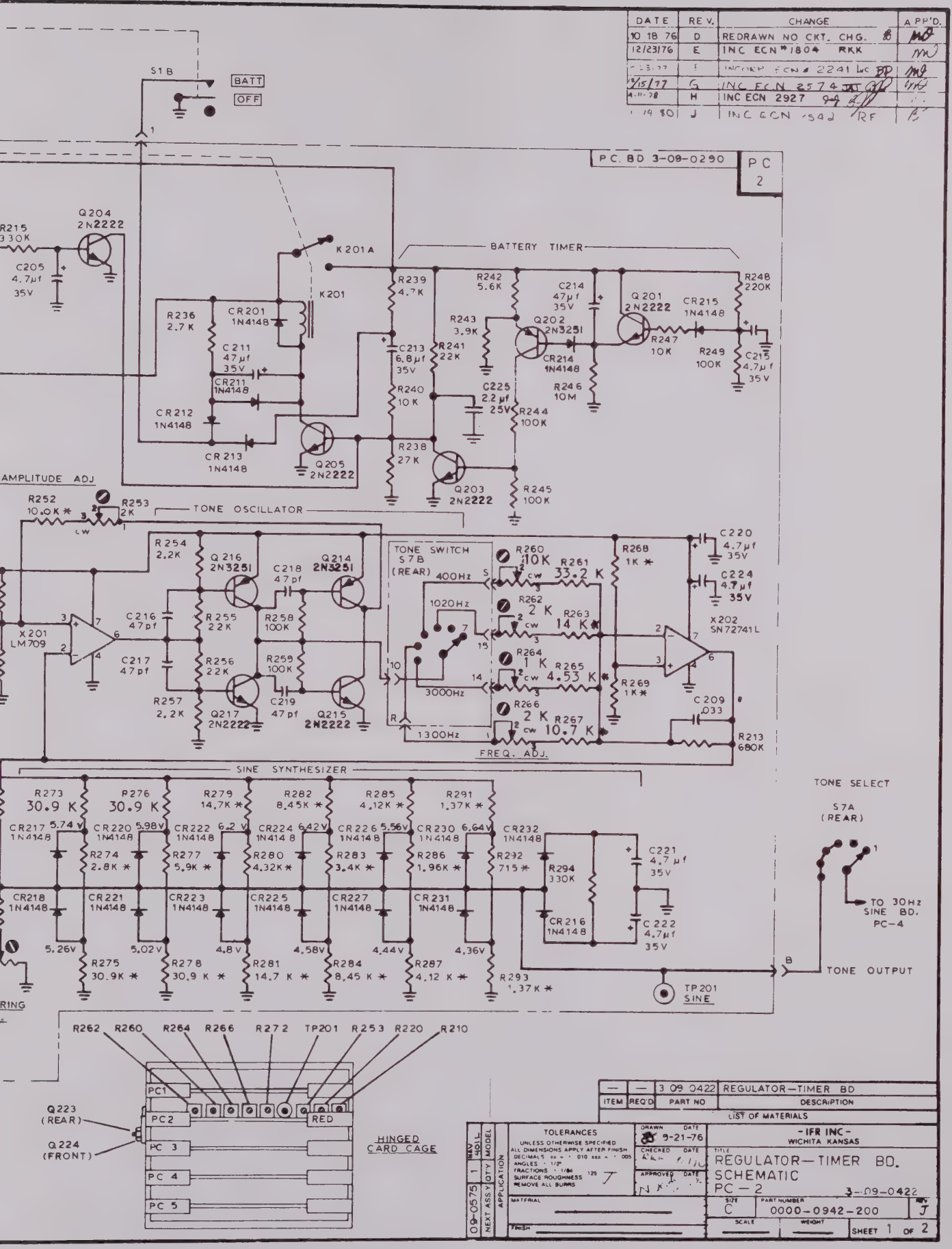
DATE
REV.
CHANGE
APP'D.
10 18 76
D
REDRAWN NO CKT. CHG.
12/23/76
E
INC ECN #1804 RKK
INC ECN #2241
5/5/77
G
INC ECN 2574
4-11-78
H
INC ECN 2927
1 14 80
J
INC ECN 5491
S1B
BATT
OFF
P.C. BD 3-09-0290
PC 2
BATTERY TIMER
K201A
K201
Q204 2N2222
R215 330K
C205 4.7µf 35V
R236 2.7K
CR201 1N4148
C211 47µf 35V
CR211 1N4148
CR212 1N4148
CR213 1N4148
Q205 2N2222
R239 4.7K
C213 6.8µf 35V
R240 10K
R238 27K
Q203 2N2222
R245 100K
R242 5.6K
R243 3.9K
R241 22K
C225 2.2µf 25V
R244 100K
C214 47µf 35V
Q202 2N3251
CR214 1N4148
R246 10M
Q201 2N2222
CR215 1N4148
R247 10K
R248 220K
R249 100K
C215 4.7µf 35V
AMPLITUDE ADJ
R252 10.0K *
R253 2K
CW
TONE OSCILLATOR
R254 2.2K
Q216 2N3251
C218 47pf
Q214 2N3251
X201 LM709
C216 47pf
R255 22K
R258 100K
C217 47pf
R256 22K
R259 100K
R257 2.2K
Q217 2N2222
C219 47pf
Q215 2N2222
TONE SWITCH S7B (REAR)
400Hz
1020Hz
3000Hz
1300Hz
R260 10K
R261 33.2 K
R262 2 K
R263 14 K *
R264 1 K
R265 4.53 K *
R266 2 K
R267 10.7 K *
FREQ. ADJ.
R268 1K *
R269 1K *
X202 SN72741L
C220 4.7µf 35V
C224 4.7µf 35V
C209 .033
R213 680K
SINE SYNTHESIZER
R273 30.9 K
R276 30.9 K
R279 14.7K *
R282 8.45K *
R285 4.12K *
R291 1.37K *
CR217 1N4148 5.74V
CR220 1N4148 5.98V
CR222 1N4148 6.2 V
CR224 1N4148 6.42V
CR226 1N4148 5.56V
CR230 1N4148 6.64V
CR232 1N4148
R274 2.8K *
R277 5.9K *
R280 4.32K *
R283 3.4K *
R286 1.96K *
R292 715 *
R294 330K
C221 4.7µf 35V
CR216 1N4148
C222 4.7µf 35V
CR218 1N4148
CR221 1N4148
CR223 1N4148
CR225 1N4148
CR227 1N4148
CR231 1N4148
5.26V
5.02V
4.8V
4.58V
4.44V
4.36V
R275 30.9K *
R278 30.9 K *
R281 14.7 K *
R284 8.45 K *
R287 4.12 K *
R293 1.37K *
TP201 SINE
TONE SELECT S7A (REAR)
TO 30Hz SINE BD. PC-4
TONE OUTPUT
RING
R262 R260 R264 R266 R272 TP201 R253 R220 R210
PC1
PC2
PC 3
PC 4
PC 5
RED
Q223 (REAR)
Q224 (FRONT)
HINGED CARD CAGE
— — 3 09 0422 REGULATOR—TIMER BD
ITEM REQ'D PART NO DESCRIPTION
LIST OF MATERIALS
TOLERANCES
UNLESS OTHERWISE SPECIFIED
ALL DIMENSIONS APPLY AFTER FINISH
DECIMALS .XX ± .010 .XXX ± .005
ANGLES ± 1/2°
FRACTIONS ± 1/64
SURFACE ROUGHNESS 125
REMOVE ALL BURRS
DRAWN DATE 9-21-76
CHECKED DATE
APPROVED DATE
MATERIAL
FINISH
- IFR INC - WICHITA KANSAS
TITLE REGULATOR—TIMER BD. SCHEMATIC PC — 2
3-09-0422
SIZE C
PART NUMBER 0000-0942-200
REV J
SCALE
WEIGHT
SHEET 1 OF 2
09-0575 1 401L
NEXT ASSY QTY MODEL
APPLICATION

Fig. 8-5

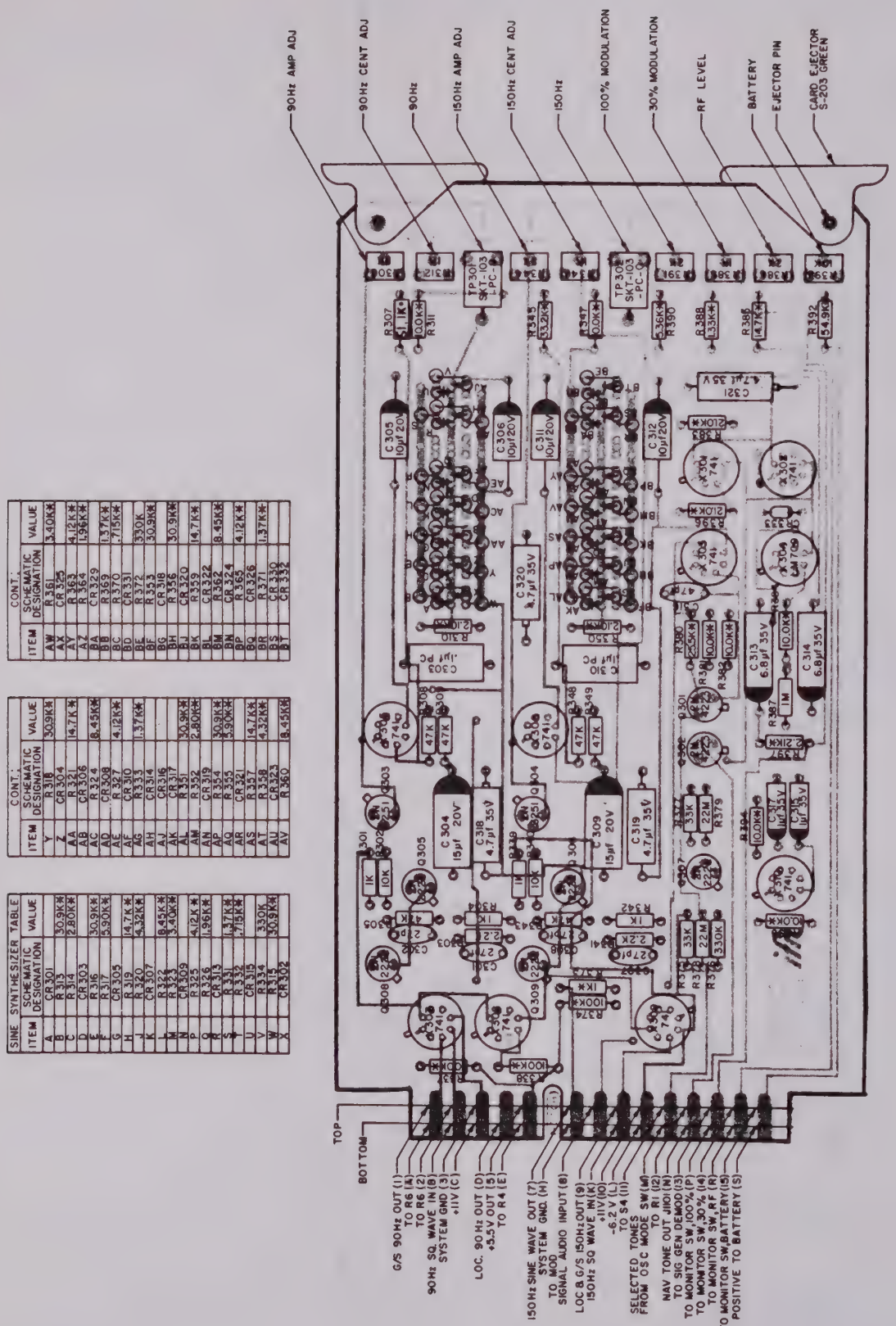

SINE SYNTHESIZER TABLE		
ITEM	SCHEMATIC DESIGNATION	VALUE
A	CR301	
B	R313	30.9K*
C	R314	2.80K*
D	CR303	
E	R316	30.9K*
F	R317	5.90K*
G	CR305	
H	R319	14.7K*
J	R320	4.32K*
K	CR307	
L	R322	8.45K*
M	R323	3.40K*
N	CR309	
P	R325	4.12K*
Q	R326	1.96K*
R	CR313	
S	R331	1.37K*
T	R332	715K*
U	CR315	
V	R334	330K
W	R335	30.9K*
X	CR302	

CONT.		
ITEM	SCHEMATIC DESIGNATION	VALUE
Y	R318	30.9K*
Z	CR304	
AA	R321	14.7K*
AB	CR306	
AC	R324	8.45K*
AD	CR308	
AE	R327	4.12K*
AF	CR310	
AG	R333	1.37K*
AH	CR314	
AJ	CR316	
AK	CR317	
AL	R351	30.9K*
AM	R352	2.80K*
AN	CR319	
AP	R354	30.9K*
AQ	R355	5.90K*
AR	CR321	
AS	R357	14.7K*
AT	R358	4.32K*
AU	CR323	
AV	R360	8.45K*

CONT.		
ITEM	SCHEMATIC DESIGNATION	VALUE
AW	R361	3.40K*
AX	CR325	
AY	R363	4.12K*
AZ	R364	1.96K*
BA	CR329	
BB	R369	1.37K*
BC	R370	715K*
BD	CR331	
BE	R372	330K
BF	R353	30.9K*
BG	CR318	
BH	R356	30.9K*
BJ	CR320	
BK	R359	14.7K*
BL	CR322	
BM	R362	8.45K*
BN	CR324	
BP	R365	4.12K*
BQ	CR326	
BR	R371	1.37K*
BS	CR330	
BT	CR332	

Fig. 8-6 COMBINATION SINE BOARD PARTS LAYOUT

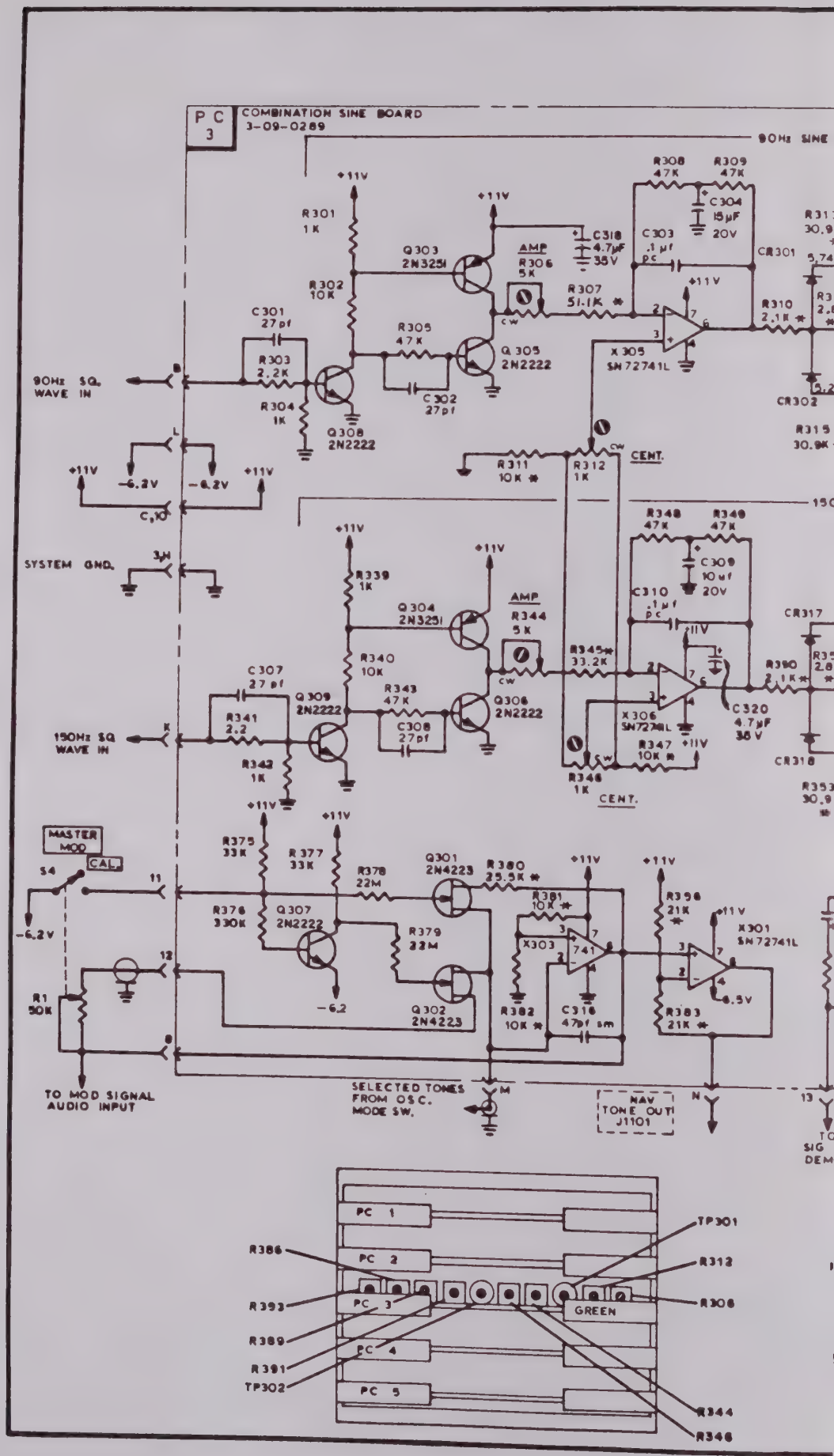
PC 3
COMBINATION SINE BOARD
3-09-0289
90Hz SINE
150
+11V
R301 1K
R302 10K
R303 2.2K
R304 1K
C301 27pf
Q303 2N3251
Q305 2N2222
Q308 2N2222
AMP
R306 5K
C318 4.7µF 35V
R307 51.1K *
R305 47K
C302 27pf
R308 47K
R309 47K
C304 15µF 20V
C303 .1µf pc
CR301
X305 SN72741L
R310 2.1K *
CR302
R311 10K *
R312 1K
CENT.
90Hz SQ. WAVE IN
-6.2V
C,10
SYSTEM GND.
3,H
R339 1K
Q304 2N3251
Q309 2N2222
Q306 2N2222
R340 10K
R343 47K
C307 27pf
C308 27pf
R341 2.2
R342 1K
150Hz SQ WAVE IN
K
R348 47K
R349 47K
C309 10 uf 20V
C310 .1µf pc
R345* 33.2K
X306 SN72741L
C320 4.7µF 35V
R347 10K *
R346 1K
CR317
CR318
R390 2.1K *
MASTER MOD CAL.
S4
R375 33K
R377 33K
R378 22M
R376 330K
Q307 2N2222
R379 22M
Q302 2N4223
Q301 2N4223
R380 25.5K *
R381 10K *
X303 741
R382 10K *
C316 47pf sm
R398 21K *
X301 SN72741L
R383 21K *
6.5V
R1 50K
TO MOD SIGNAL AUDIO INPUT
SELECTED TONES FROM OSC. MODE SW.
NAV TONE OUT J1101
SIG DEM
PC 1
PC 2
PC 3
PC 4
PC 5
R386
R393
R389
R391
TP302
TP301
R312
R308
GREEN
R344
R346

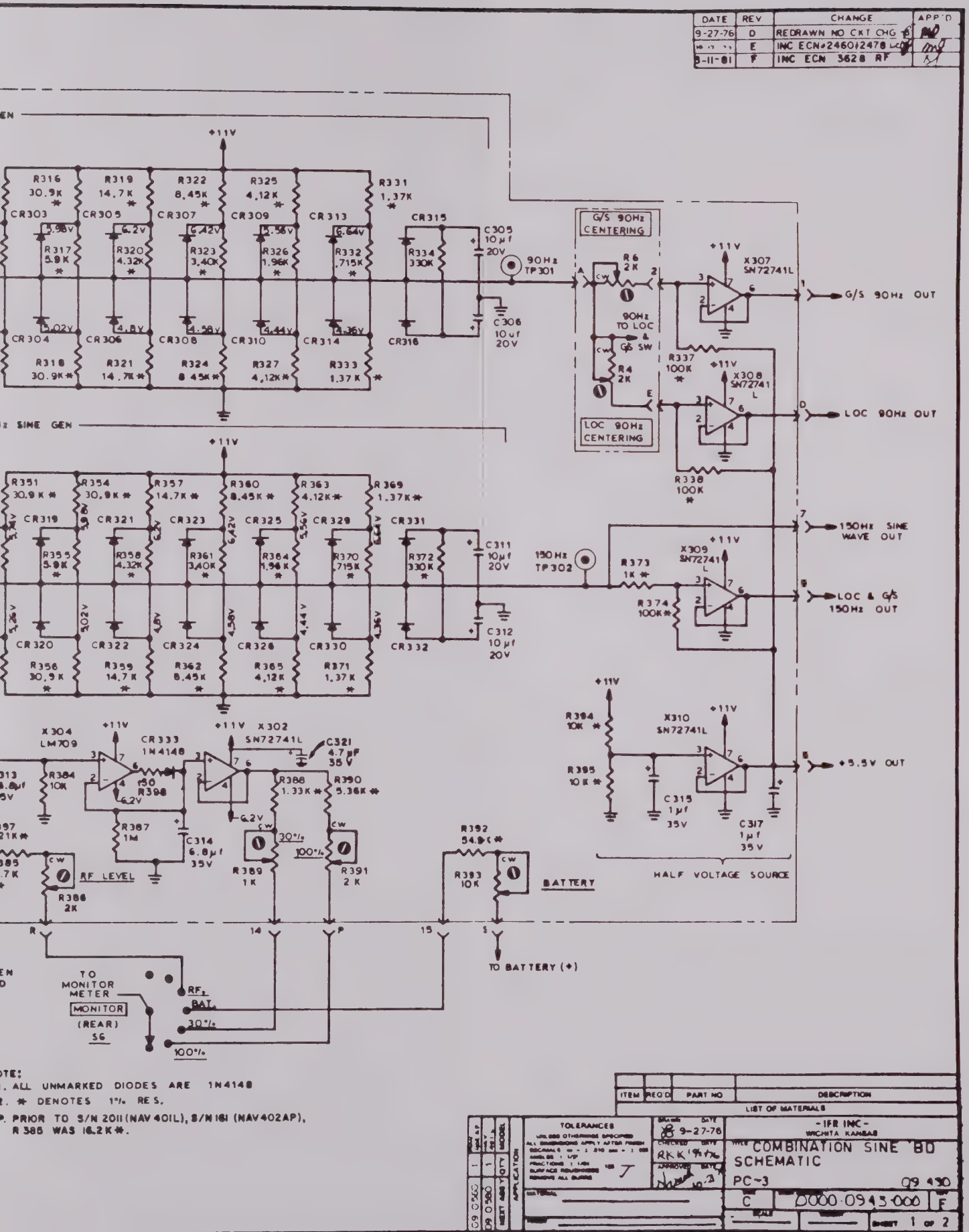
DATE REV CHANGE APP'D
9-27-76 D REDRAWN NO CKT CHG
E INC ECN#2460/2478
8-11-81 F INC ECN 3628 RF
+11V
R316 30.9K
R319 14.7K
R322 8.45K
R325 4.12K
R331 1.37K
CR303 5.98V
CR305 6.2V
CR307 6.42V
CR309 6.56V
CR313 6.64V
CR315
R317 5.9K
R320 4.32K
R323 3.40K
R326 1.96K
R332 .715K
R334 330K
C305 10µf 20V
90Hz TP301
C306 10uf 20V
CR304 5.02V
CR306 4.8V
CR308 4.58V
CR310 4.44V
CR314 4.36V
CR316
R318 30.9K*
R321 14.7K*
R324 8.45K*
R327 4,12K*
R333 1.37K*
G/S 90Hz CENTERING
R6 2K
90Hz TO LOC & G/S SW
R4 2K
LOC 90Hz CENTERING
X307 SN72741L
G/S 90Hz OUT
R337 100K
X308 SN72741L
LOC 90Hz OUT
R338 100K
SINE GEN
R351 30.9K*
R354 30.9K*
R357 14.7K*
R360 8.45K*
R363 4.12K*
R369 1.37K*
CR319 5.98V
CR321 6.2V
CR323 6.42V
CR325 6.56V
CR329 6.64V
CR331
R355 5.9K
R358 4.32K
R361 3.40K
R364 1.96K
R370 .715K
R372 330K
C311 10µf 20V
150Hz TP302
C312 10µf 20V
CR320 5.02V
CR322 4.8V
CR324 4.58V
CR326 4.44V
CR330 4.36V
CR332
R356 30.9K
R359 14.7K
R362 8.45K
R365 4.12K
R371 1.37K
150Hz SINE WAVE OUT
R373 1K*
X309 SN72741L
R374 100K*
LOC & G/S 150Hz OUT
X304 LM709
CR333 1N4148
X302 SN72741L
C321 4.7µf 35V
R384 10K
R150 R398
R388 1.33K*
R390 5.36K*
R387 1M
C314 6.8µf 35V
30%
100%
R389 1K
R391 2K
RF LEVEL
R386 2K
R392 54.9K*
R383 10K
BATTERY
R394 10K*
R395 10K*
X310 SN72741L
+5.5V OUT
C315 1µf 35V
C317 1µf 35V
HALF VOLTAGE SOURCE
TO BATTERY (+)
TO MONITOR METER
MONITOR (REAR) SG
RF
BAT
30%
100%
NOTE:
1. ALL UNMARKED DIODES ARE 1N4148
2. * DENOTES 1% RES.
3. PRIOR TO S/N 2011(NAV401L), S/N 161 (NAV402AP), R388 WAS 16.2K*.
ITEM REQ'D PART NO DESCRIPTION
LIST OF MATERIALS
TOLERANCES
- IFR INC - WICHITA KANSAS
COMBINATION SINE '80 SCHEMATIC
PC-3
09 430
C 0000-0943-000 F
SHEET 1 OF 2

Fig. 8-7

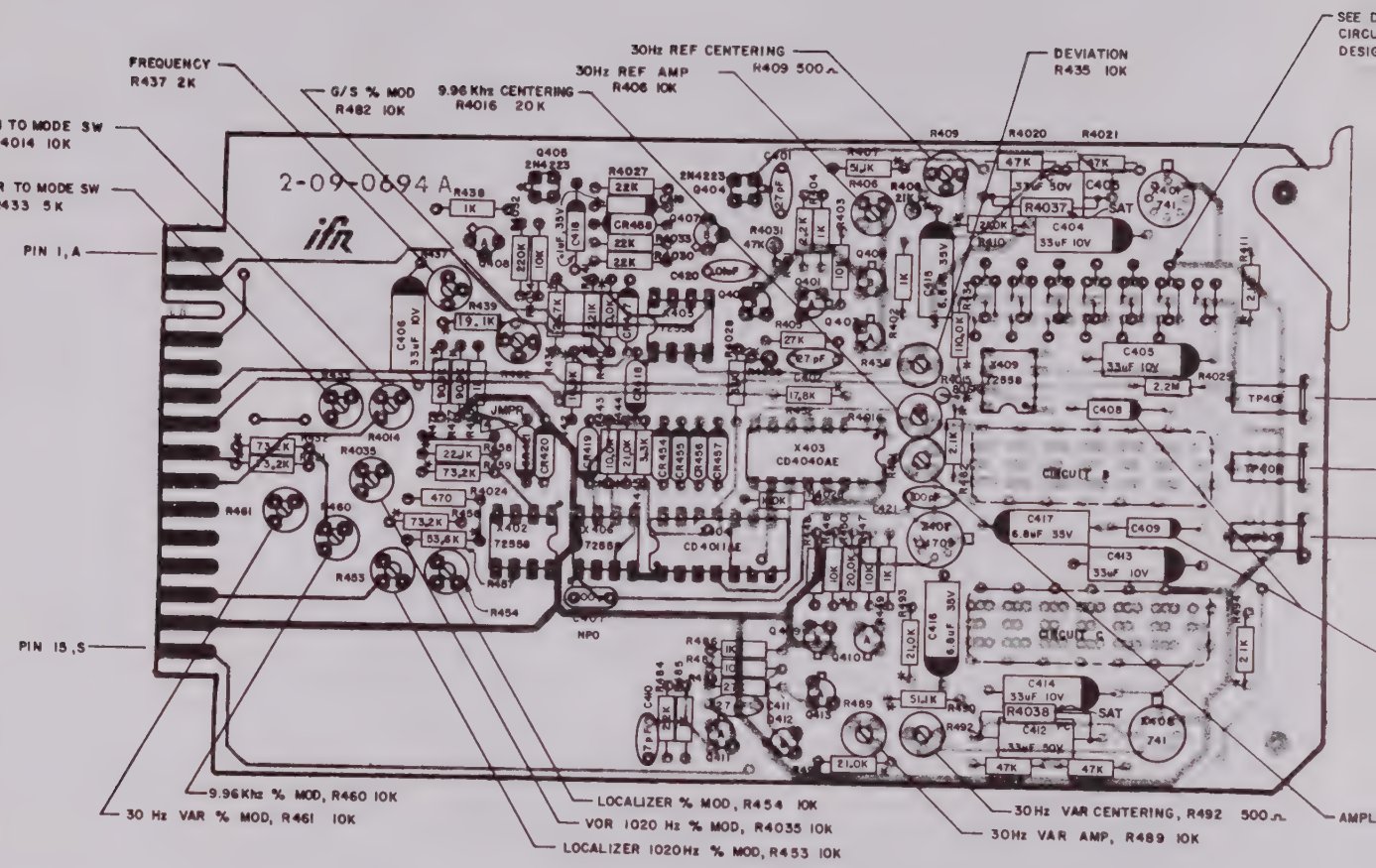

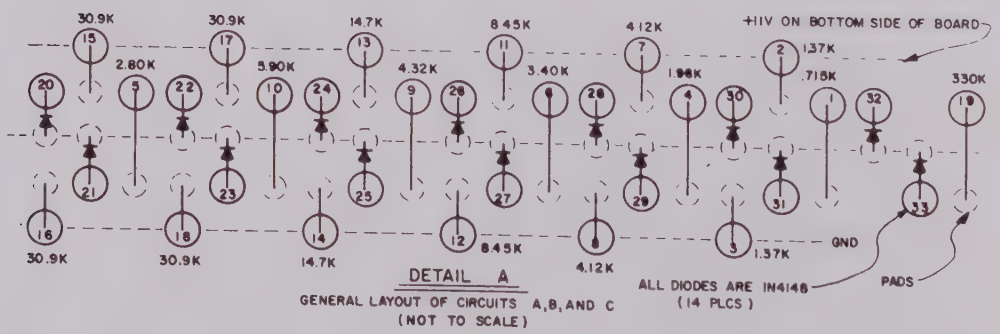

Fig. 8-8 30 Hz SINE BO

A FOR GENERAL LAYOUT OF
,B,C AND TABLE I FOR REF
NS

— 30Hz REF

— 9.96 Khz REF

— 30Hz VAR REF

— 1 uF, 35V TANT

1 5K

TABLE 1			
PIN NO.	REF DESIG	PIN NO.	REF DESIG
1		A	30Hz REF SINE OUT
2	G/S DEV IN	B	TONE BUFFER IN
3		C	
4	30Hz REF IN	D	G/S DEV OUT
5		E	GND
6	9.96 Khz SINE OUT	F	
7	+ 5.5V	H	VOR TO MODE SW
8	30Hz VAR OUT	J	9.96Khz IN
9	COM TO MODE SW	K	MKR TO MODE SW
10		L	
11		M	
12		N	LOC XMTR
13	LOC TO MODE SW	P	LOC DEV IN
14	+11V	R	
15	30Hz VAR POT (R2)	S	30Hz VAR IN

TABLE 2				
NO.	VALUE	CIRCUIT A	CIRCUIT B	CIRCUIT C
1	.715K	R428	R481	R4012
2	1.37K	R427	R479	R4011
3	1.37K	R429	R480	R4013
4	1.96K	R425	R475	R4009
5	2.80K	R413	R464	R496
6	3.40K	R422	R472	R4006
7	4.12K	R424	R474	R4008
8	4.12K	R426	R476	R4010
9	4.32K	R419	R469	R4003
10	5.90K	R416	R466	R499
11	8.45K	R421	R471	R4005
12	8.45K	R423	R473	R4007
13	14.7 K	R418	R468	R4002
14	14.7 K	R420	R470	R4004
15	30.9K	R412	R463	R495
16	30.9K	R414	R465	R497
17	30.9K	R415	R467	R498
18	30.9K	R417	R4019	R4001
19	330K	R430	R483	R4017
20	IN4148	CR401	CR422	CR438
21		CR402	CR423	CR439
22		CR403	CR424	CR440
23		CR404	CR425	CR441
24		CR405	CR426	CR442
25		CR406	CR427	CR443
26		CR407	CR428	CR444
27	IN4148	CR408	CR429	CR445
28		CR409	CR430	CR446
29		CR410	CR431	CR447
30		CR411	CR432	CR448
31		CR412	CR433	CR449
32		CR413	CR436	CR452
33	IN4148	CR414	CR437	CR453

D PARTS LAYOUT

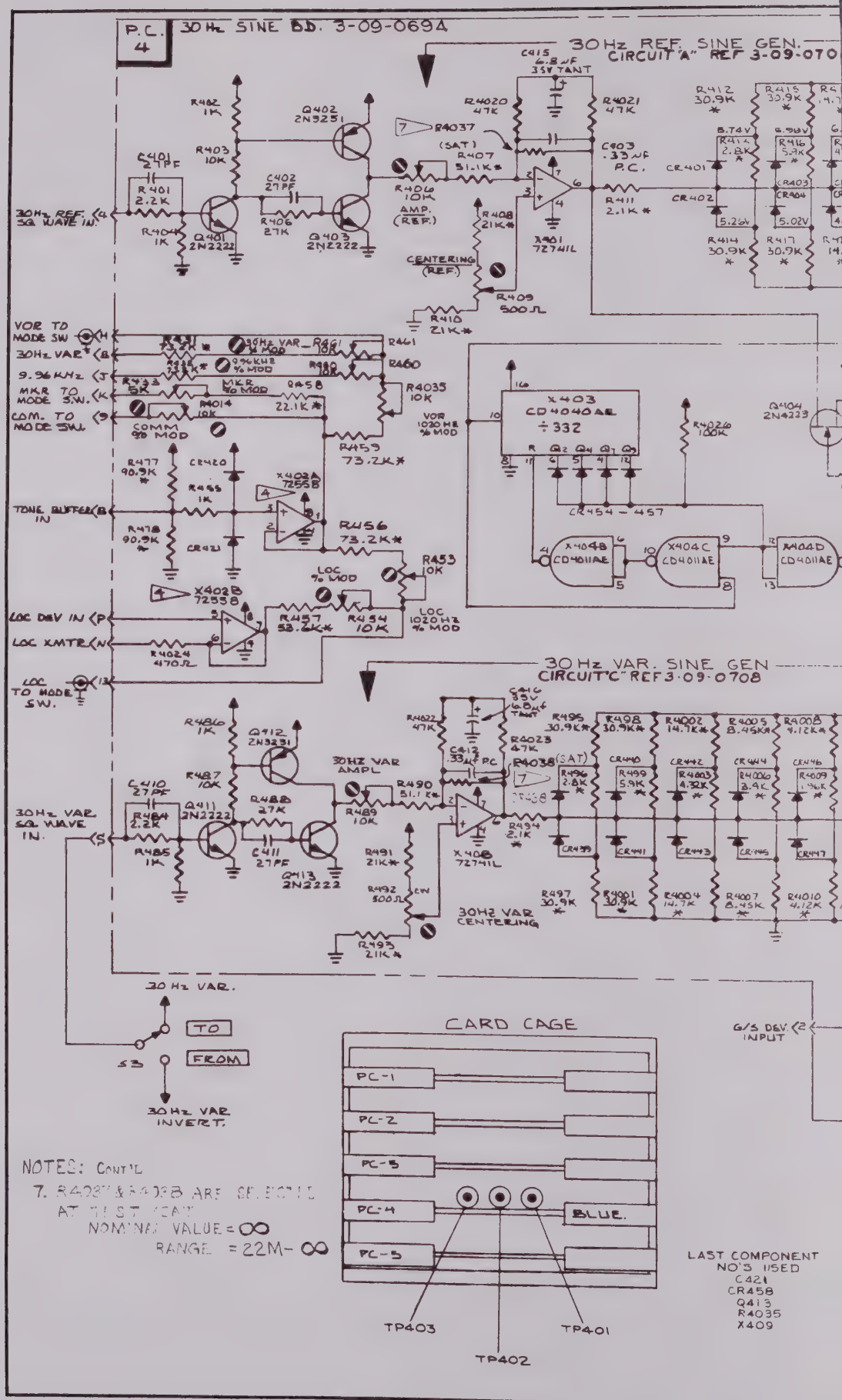
P.C. 4
30 Hz SINE BD. 3-09-0694
30Hz REF. SINE GEN. CIRCUIT "A" REF 3-09-070
30Hz REF. SQ WAVE IN
VOR TO MODE SW
30Hz VAR
9.96 KHz
MKR TO MODE SW.
COM. TO MODE SW.
TONE BUFFER IN
LOC DEV IN
LOC XMTR
LOC TO MODE SW.
30Hz VAR. SQ WAVE IN.
30Hz VAR. CIRCUIT "C" REF 3-09-0708
30Hz VAR AMPL
30Hz VAR CENTERING
30Hz VAR.
TO
FROM
30Hz VAR INVERT.
CARD CAGE
PC-1
PC-2
PC-3
PC-4
PC-5
BLUE.
TP403
TP402
TP401
G/S DEV INPUT
NOTES: CONT'D
7. R4037 & R4038 ARE SELECTED AT TEST FOR NOMINAL VALUE = ∞ RANGE = 22M- ∞
LAST COMPONENT NO'S USED
C421
CR458
Q413
R4035
X409

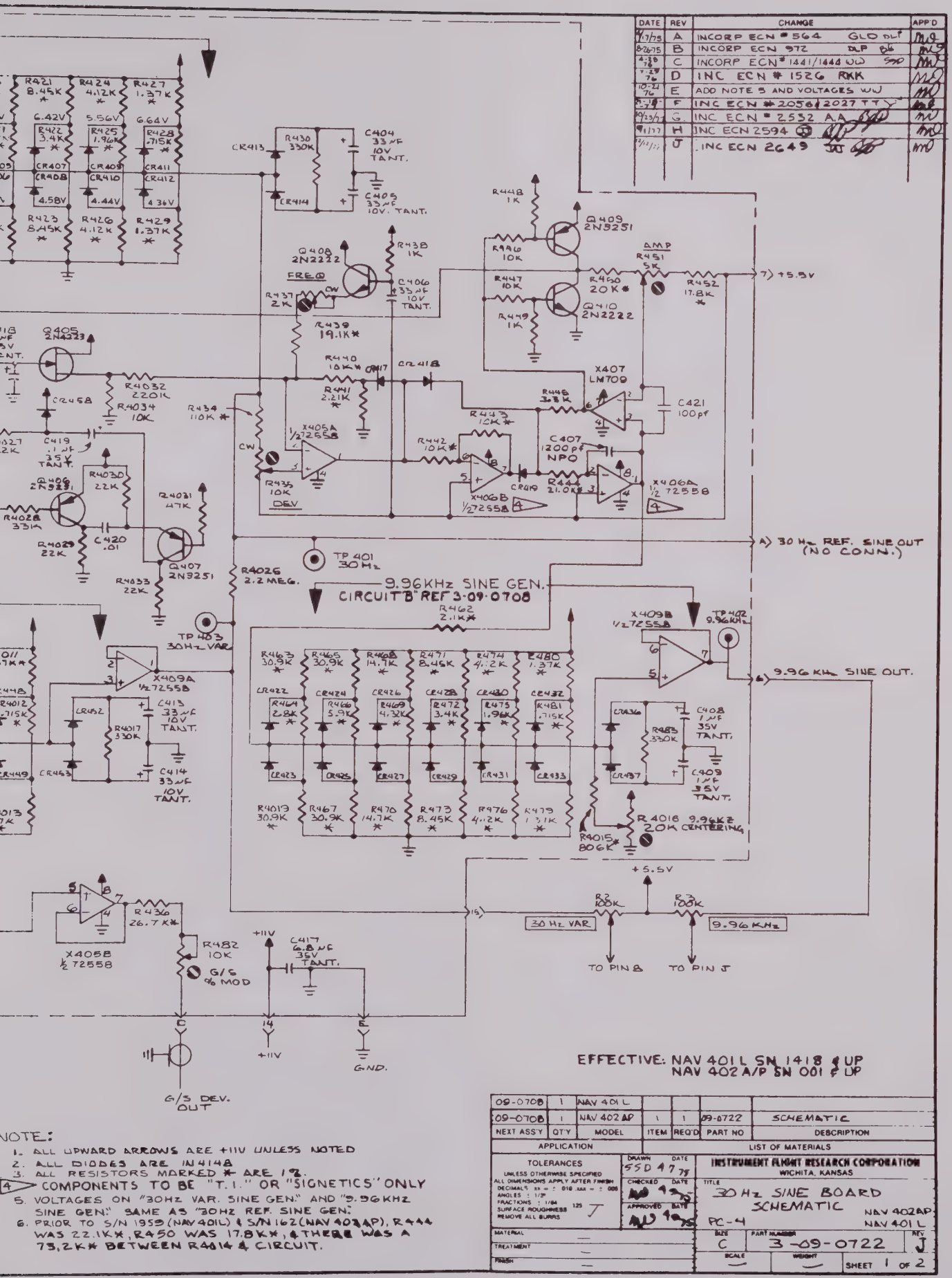

DATE	REV	CHANGE	APP'D
7/7/75	A	INCORP ECN # 564 GLD DLP	
8/26/75	B	INCORP ECN 972 DLP BB	
4/30/76	C	INCORP ECN # 1441/1444 WW SSD	
7/29/76	D	INC ECN # 1526 RKK	
10/22/76	E	ADD NOTE 5 AND VOLTAGES WW	
5/2/77	F	INC ECN # 2056 & 2027 TT	
10/13/77	G	INC ECN # 2532 AA	
9/1/77	H	INC ECN 2594	
12/11/77	J	INC ECN 2649	

EFFECTIVE: NAV 401 L SN 1418 & UP
NAV 402 A/P SN 001 & UP

NEXT ASS'Y	QTY	MODEL	ITEM	REQ'D	PART NO	DESCRIPTION
09-0708	1	NAV 401 L				
09-0708	1	NAV 402 AP	1	1	09-0722	SCHEMATIC

APPLICATION — LIST OF MATERIALS

TOLERANCES
UNLESS OTHERWISE SPECIFIED
ALL DIMENSIONS APPLY AFTER FINISH
DECIMALS .XX = ± .010 .XXX = ± .005
ANGLES ± 1/2°
FRACTIONS ± 1/64
SURFACE ROUGHNESS 125
REMOVE ALL BURRS

DRAWN SSD 4/7/78
CHECKED DATE
APPROVED DATE

INSTRUMENT FLIGHT RESEARCH CORPORATION
WICHITA, KANSAS

TITLE: 30 Hz SINE BOARD SCHEMATIC
NAV 402AP
NAV 401 L
PC-4

MATERIAL — TREATMENT — FINISH —

SIZE C | PART NUMBER 3-09-0722 | REV J
SCALE — WEIGHT — SHEET 1 OF 2

NOTE:
1. ALL UPWARD ARROWS ARE +11V UNLESS NOTED
2. ALL DIODES ARE IN4148
3. ALL RESISTORS MARKED * ARE 1%.
4. COMPONENTS TO BE "T.I." OR "SIGNETICS" ONLY
5. VOLTAGES ON "30Hz VAR. SINE GEN." AND "9.96KHz SINE GEN." SAME AS "30Hz REF. SINE GEN."
6. PRIOR TO S/N 1959 (NAV 401L) & S/N 162 (NAV 402AP), R444 WAS 22.1K*, R450 WAS 17.8K*, & THERE WAS A 73.2K* BETWEEN R4014 & CIRCUIT.

Fig. 8-9

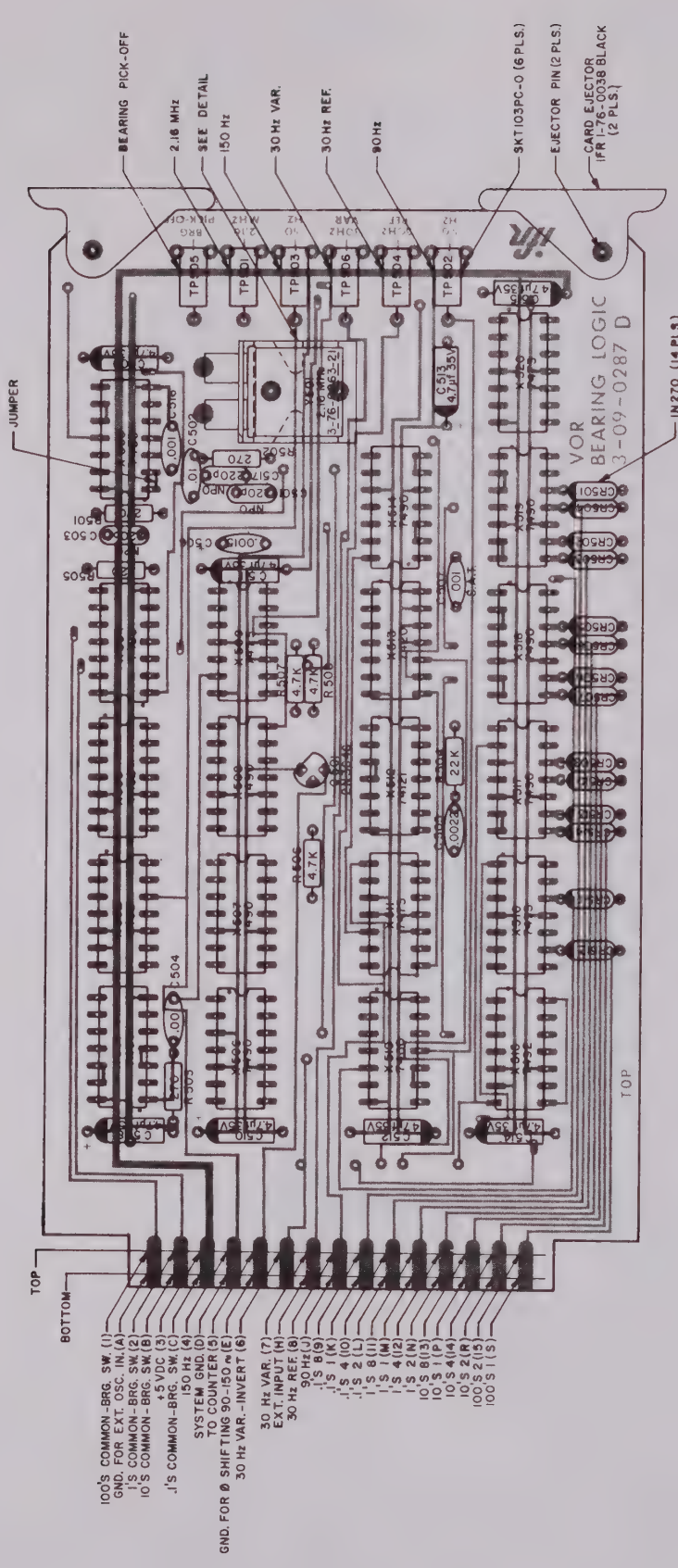

Fig. 8-10 VOR BEARING LOGIC BOARD PARTS LAYOUT

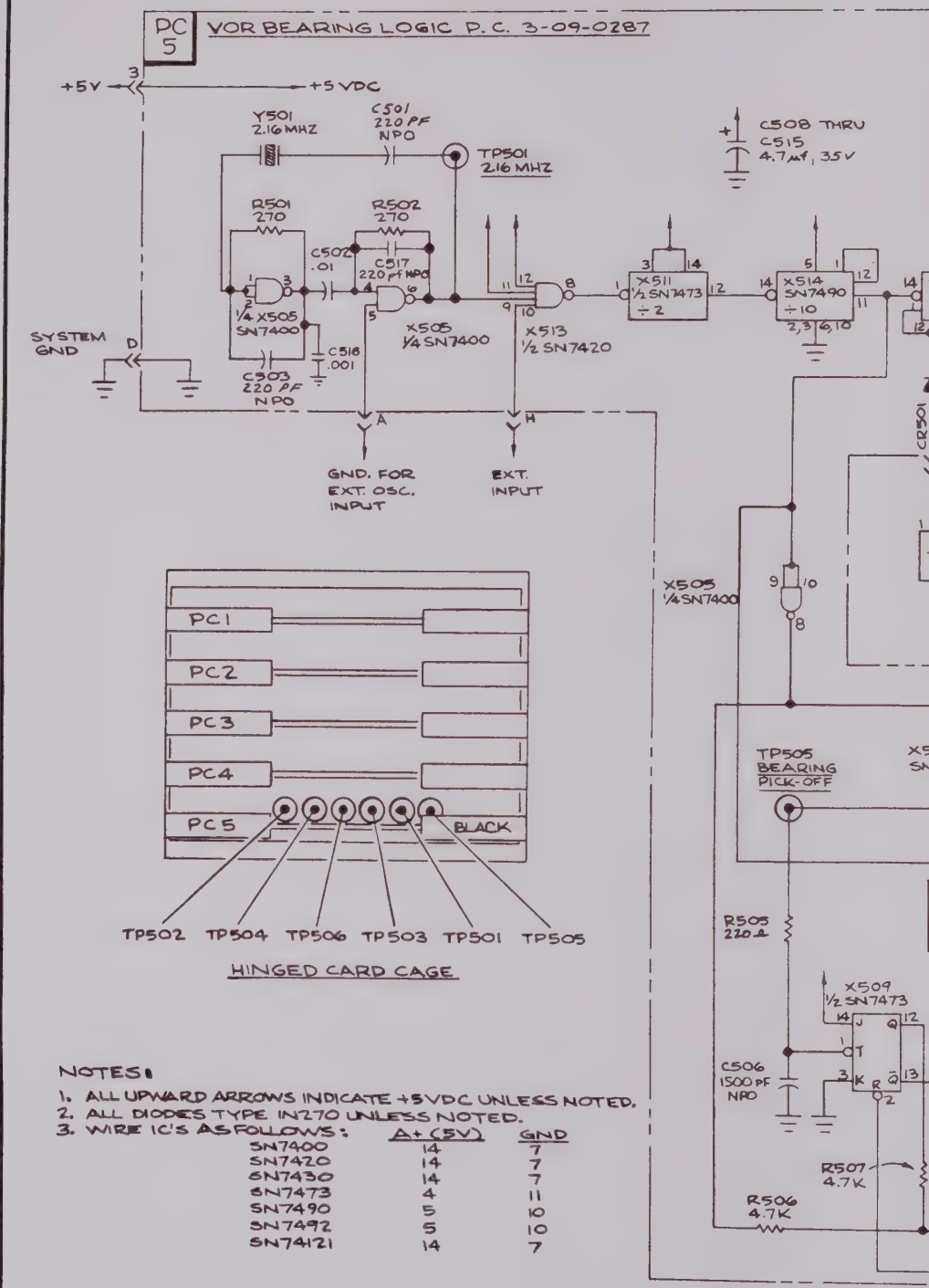

NOTES:

1. ALL UPWARD ARROWS INDICATE +5VDC UNLESS NOTED.
2. ALL DIODES TYPE IN270 UNLESS NOTED.
3. WIRE IC'S AS FOLLOWS:

	A+ (5V)	GND
SN7400	14	7
SN7420	14	7
SN7430	14	7
SN7473	4	11
SN7490	5	10
SN7492	5	10
SN74121	14	7

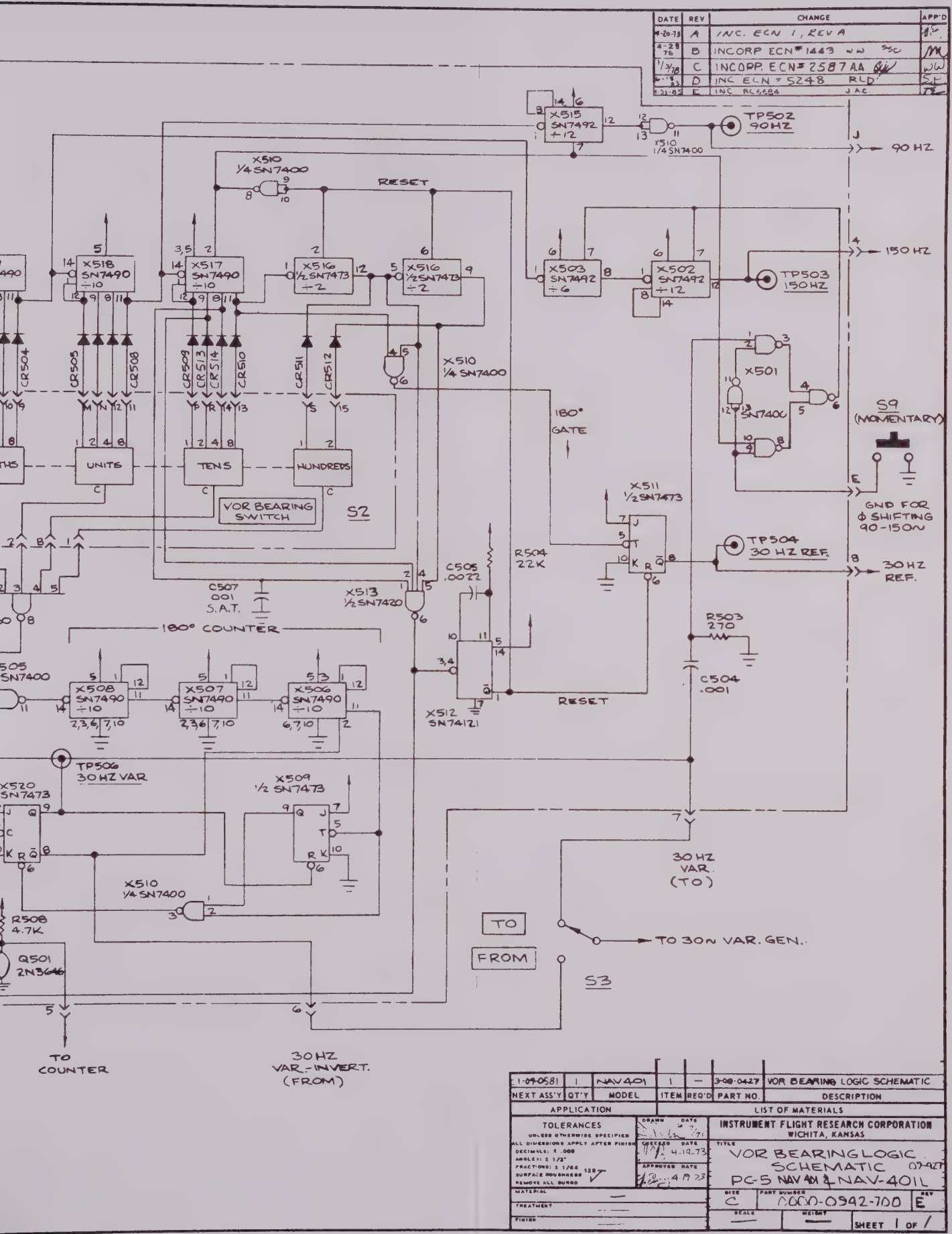
DATE | REV | CHANGE | APP'D
A | INC. ECN 1, REV A
B | INCORP ECN# 1443
C | INCORP. ECN# 2587 AA
D | INC ECN # 5248 RLD
E | INC RC6684 JAC
X515 SN7492 ÷12
TP502 90HZ
90 HZ
X510 1/4 SN7400
RESET
X518 SN7490 ÷10
X517 SN7490 ÷10
X516 1/2 SN7473 ÷2
X516 1/2 SN7473 ÷2
X503 SN7492 ÷6
X502 SN7492 ÷12
TP503 150HZ
150 HZ
CR504
CR505
CR508
CR509
CR513
CR514
CR510
CR511
CR512
X510 1/4 SN7400
X501 SN7400
S9 (MOMENTARY)
GND FOR Φ SHIFTING 90-150N
180° GATE
UNITS
TENS
HUNDREDS
VOR BEARING SWITCH
S2
X511 1/2 SN7473
TP504 30 HZ REF.
30 HZ REF.
R504 22K
C505 .0022
C507 001 S.A.T.
X513 1/2 SN7420
180° COUNTER
R503 270
C504 .001
X508 SN7490 ÷10
X507 SN7490 ÷10
X506 SN7490 ÷10
X512 SN74121
RESET
TP506 30 HZ VAR
X520 SN7473
X509 1/2 SN7473
30 HZ VAR. (TO)
X510 1/4 SN7400
R508 4.7K
Q501 2N3646
TO
FROM
S3
TO 30N VAR. GEN.
TO COUNTER
30 HZ VAR. INVERT. (FROM)
1-090581 | 1 | NAV401 | 1 | — | 3-08-0427 | VOR BEARING LOGIC SCHEMATIC
NEXT ASS'Y | QT'Y | MODEL | ITEM | REQ'D | PART NO. | DESCRIPTION
APPLICATION
LIST OF MATERIALS
TOLERANCES
INSTRUMENT FLIGHT RESEARCH CORPORATION WICHITA, KANSAS
VOR BEARING LOGIC SCHEMATIC 03-0427 PC-5 NAV 401 & NAV-401L
C | 0000-0942-700 | E
SHEET 1 OF 1

Fig. 8-11

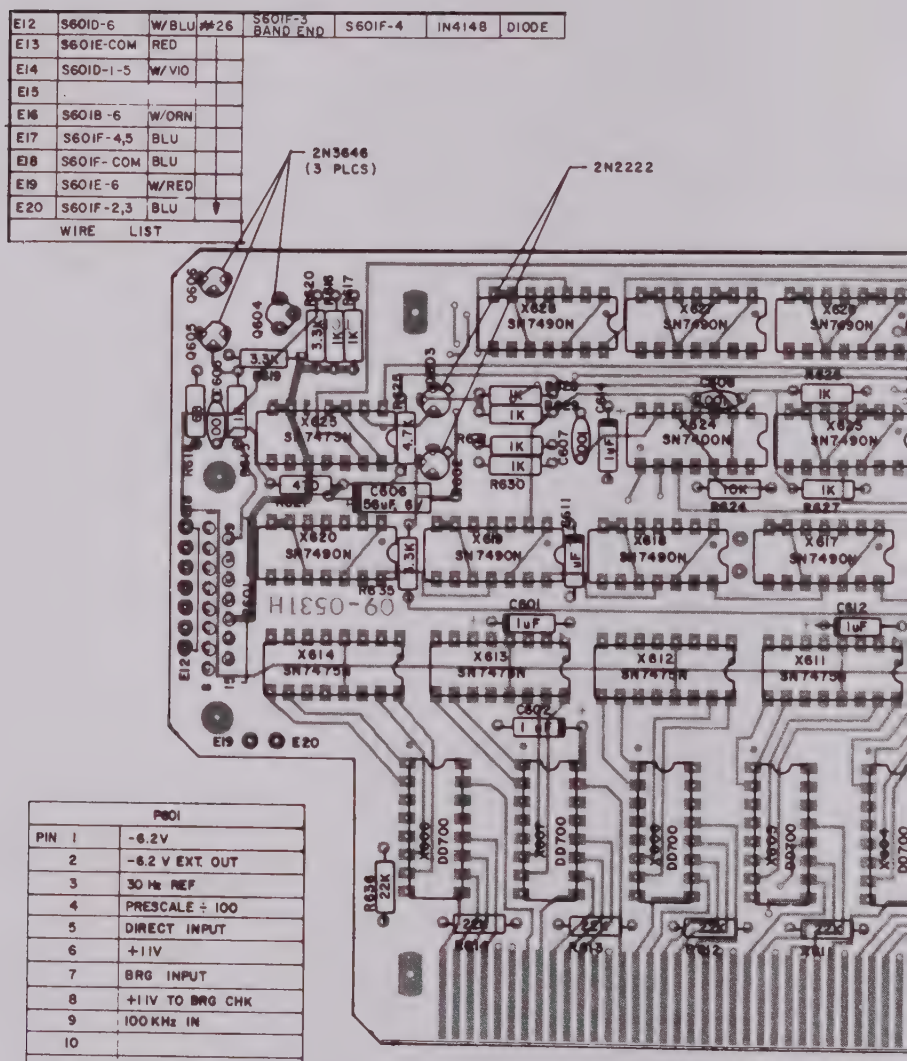

P601	
PIN 1	-6.2V
2	-6.2 V EXT. OUT
3	30 Hz REF
4	PRESCALE ÷ 100
5	DIRECT INPUT
6	+11V
7	BRG INPUT
8	+11V TO BRG CHK
9	100 KHz IN
10	
11	SYSTEM GND
12	250/166 Hz OUT
13	+ 5V
14	+11V ON GS
15	-6.2V GEN OUTPUT

Fig. 8-12 COUNTER BOAR

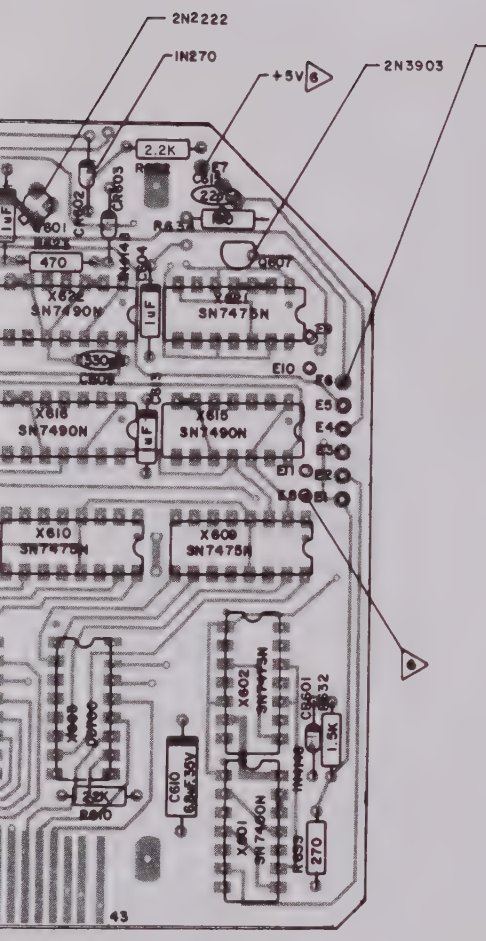

WIRE LIST			
	OUTPUTS	COLOR	SIZE
E1	S601C-2,3,4,5,6	W/BRN	#22
E2	S601B-1,3,5	W/GRN	
E3	SYSTEM GND	BLK	
E4	S601D-COM	W/BLU	
E5	S601B-2,4	W/ORN	
E6	S601B-COM	W/BLK	
E7	R637-1	W/GRN	
E8	R637-3	W/YEL	
E9	S602	ORN	
E10	S602	ORN	
E11	R637-2	ORN	

PARTS LAYOUT

8-23/8-24 Blank
01

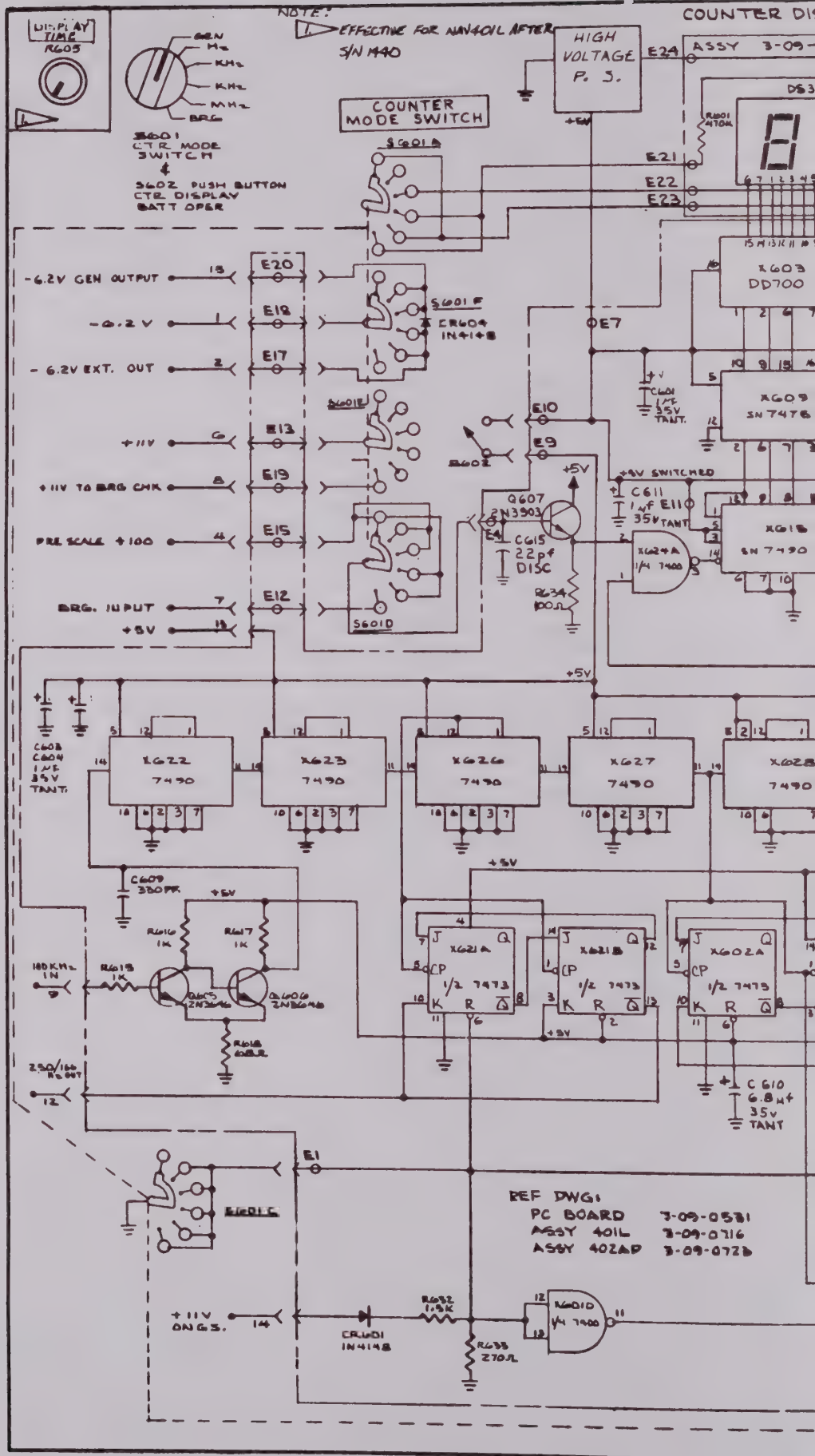

NOTE:
EFFECTIVE FOR NAV401L AFTER S/N 1440
DISPLAY TIME R605
GEN
Hz
KHz
KHz
MHz
BRG
S601 CTR MODE SWITCH
S602 PUSH BUTTON CTR DISPLAY BATT OPER
COUNTER MODE SWITCH
HIGH VOLTAGE P. S.
COUNTER DI
ASSY 3-09-
S601A
S601F
CR604 1N4148
S601E
S601D
S601C
-6.2V GEN OUTPUT
-6.2V
-6.2V EXT. OUT
+11V
+11V TO BRG CHK
PRE SCALE +100
BRG. INPUT
+5V
E20
E18
E17
E13
E19
E15
E12
E7
E10
E9
E4
E24
E21
E22
E23
E1
S602
Q607 2N3903
C615 22pf DISC
R634 100Ω
C601 1μf 35V TANT.
+5V SWITCHED
C611 1μf 35V TANT
E11
X624A 1/4 7400
X603 DD700
X609 SN7478
X615 SN7490
X622 7490
X623 7490
X626 7490
X627 7490
X628 7490
C603 C604 1μf 35V TANT.
C609 330PF
R616 1K
R617 1K
R615 1K
R618 68Ω
Q605 2N3646
Q606 2N3646
180KHz IN
250/166 Hz OUT
X621A 1/2 7473
X621B 1/2 7473
X602A 1/2 7473
C610 6.8μf 35V TANT
REF DWG:
PC BOARD 3-09-0531
ASSY 401L 3-09-0716
ASSY 402AP 3-09-0723
+11V ON GS.
CR601 1N4148
R632 1.5K
R633 270Ω
X601D 1/4 7400

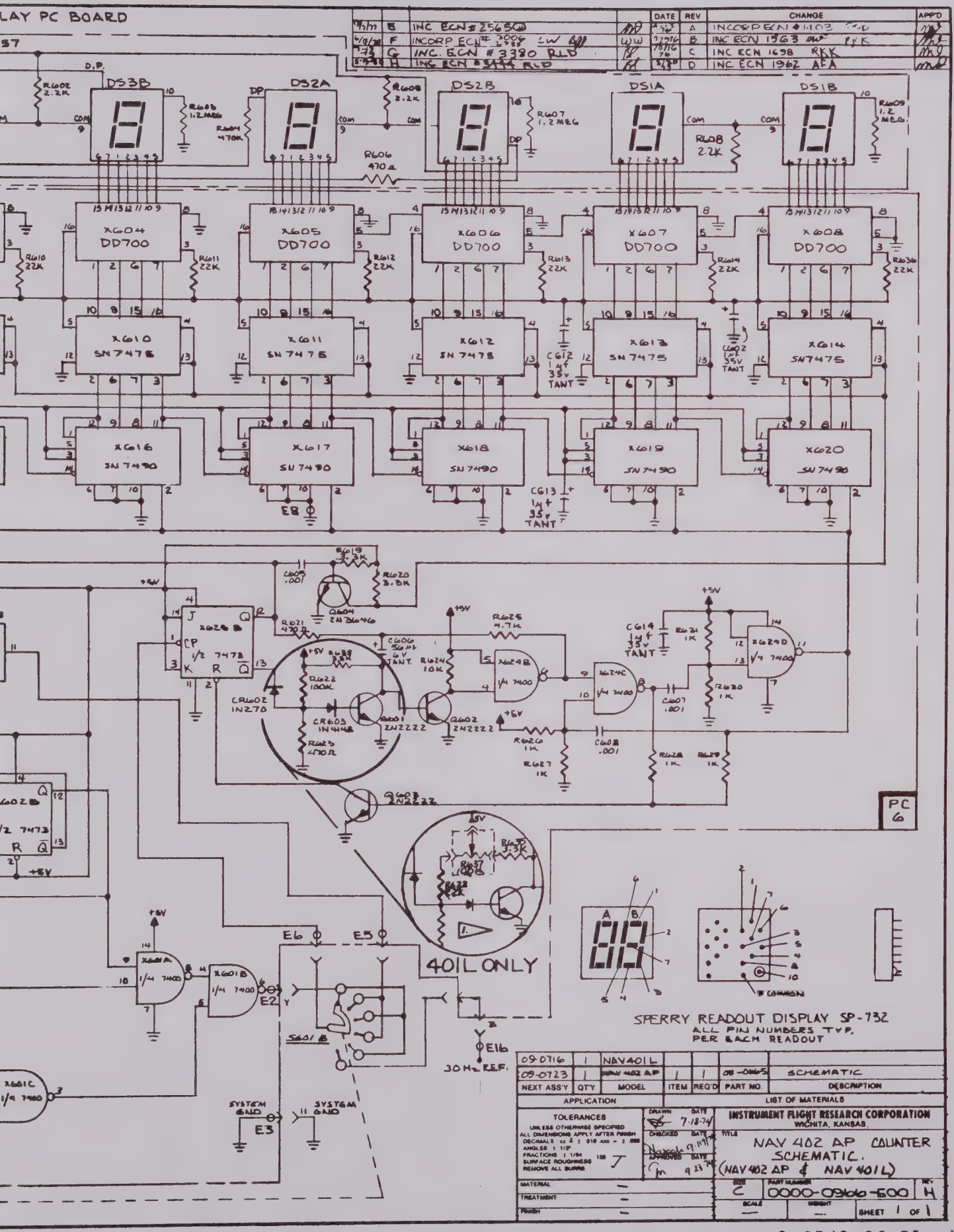
LAY PC BOARD
DATE
REV
CHANGE
APP'D
E INC ECN #2565
F INCORP ECN #3006
G INC. ECN #3380 RLD
H INC ECN #3444 RLD
A INCORP ECN #1103
B INC ECN 1563
C INC ECN 1698 RKK
D INC ECN 1962 AFA
DS3B
DS2A
DS2B
DS1A
DS1B
R606 470Ω
X604 DD700
X605 DD700
X606 DD700
X607 DD700
X608 DD700
X610 SN7475
X611 SN7475
X612 SN7475
X613 SN7475
X614 SN7475
X616 SN7490
X617 SN7490
X618 SN7490
X619 SN7490
X620 SN7490
C612 1μf 35v TANT
C602 1μf 35v TANT
C613 1μf 35v TANT
X626B 1/2 7473
Q604 2N3646
Q601 2N2222
Q602 2N2222
Q603 2N2222
CR602 1N270
CR603 1N4148
X624B 1/4 7400
X624C 1/4 7400
X624D 1/4 7400
C614 1μf 35v TANT
PC 6
401L ONLY
X601A 1/4 7400
X601B 1/4 7400
X601C 1/4 7400
S601B
E6
E5
E2
E3
E16
30 Hz REF.
SYSTEM GND
SPERRY READOUT DISPLAY SP-732
ALL PIN NUMBERS TYP.
PER EACH READOUT
09-0716 1 NAV401L
09-0723 1 NAV 402 AP 1 1 09-0665 SCHEMATIC
NEXT ASS'Y QTY MODEL ITEM REQ'D PART NO. DESCRIPTION
APPLICATION
LIST OF MATERIALS
TOLERANCES
UNLESS OTHERWISE SPECIFIED
ALL DIMENSIONS APPLY AFTER FINISH
DECIMALS .xx ± .010 .xxx ± .005
ANGLES ± 1/2°
FRACTIONS ± 1/64
SURFACE ROUGHNESS 125
REMOVE ALL BURRS
DRAWN DATE 7-18-74
CHECKED DATE 9-11-74
APPROVED DATE 9-23-74
INSTRUMENT FLIGHT RESEARCH CORPORATION
WICHITA, KANSAS.
TITLE
NAV 402 AP COUNTER SCHEMATIC.
(NAV 402 AP & NAV 401L)
SIZE C
PART NUMBER 0000-0966-500
REV H
SCALE
WEIGHT
SHEET 1 OF 1
MATERIAL
TREATMENT
FINISH

Fig. 8-13

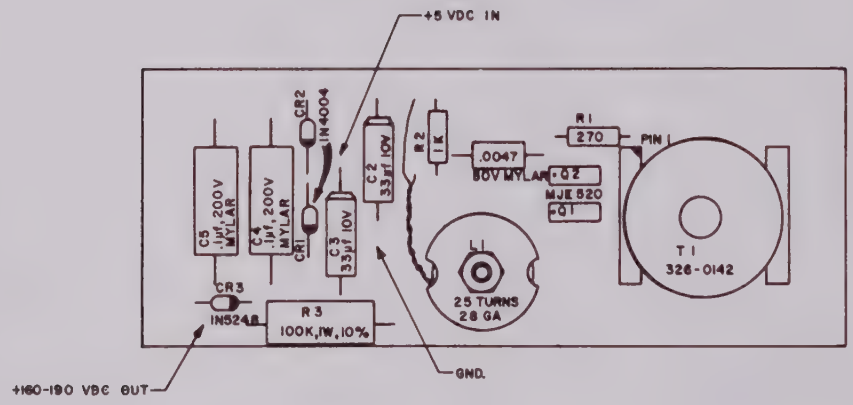

Fig. 8-14 HIGH VOLTAGE POWER SUPPLY BOARD PARTS LAYOUT 8-27/8-28 Blank

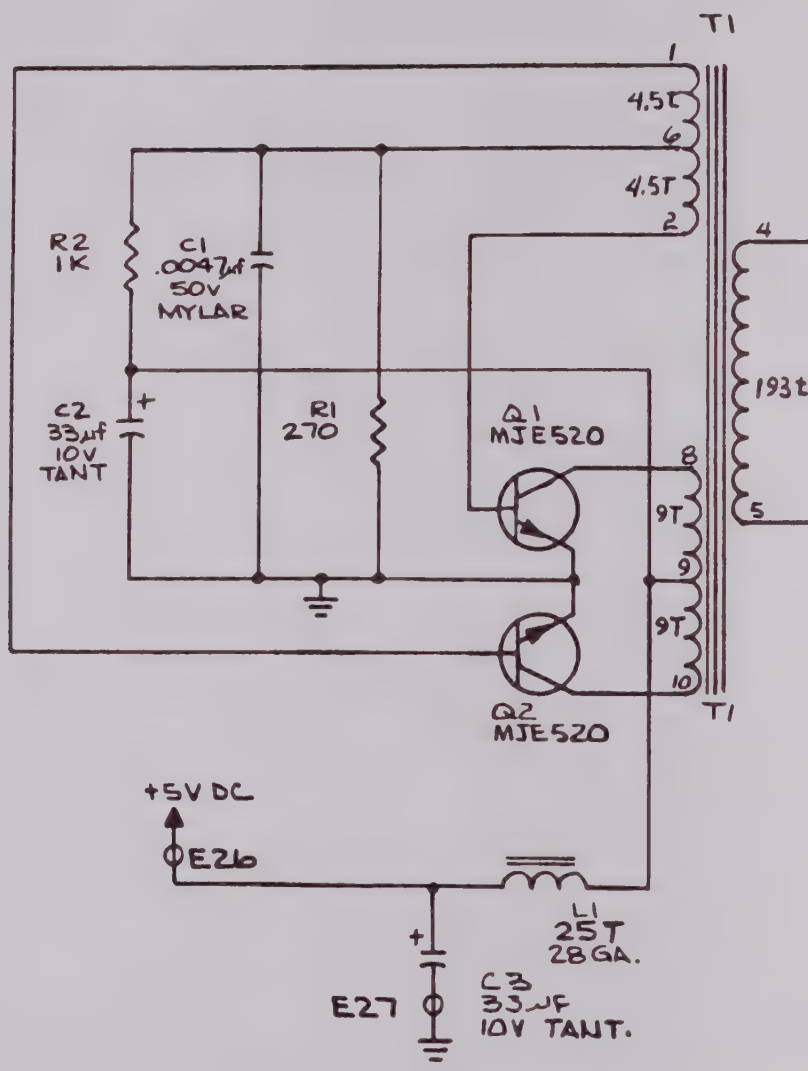
T1
1
4.5T
6
4.5T
2
4
193t
5
R2
1K
C1
.0047µf
50V
MYLAR
C2
33µf
10V
TANT
R1
270
Q1
MJE520
8
9T
9
9T
10
Q2
MJE520
T1
+5V DC
E26
L1
25T
28GA.
E27
C3
33µF
10V TANT.

DATE	REV	CHANGE	APP'D
10-10-75	B	INCORP ECN # 1016 SSD	
7-29-76	C	INC ECN # 1543 MD KKK	
8-19-80	D	INC ECN # 3444 RLD	

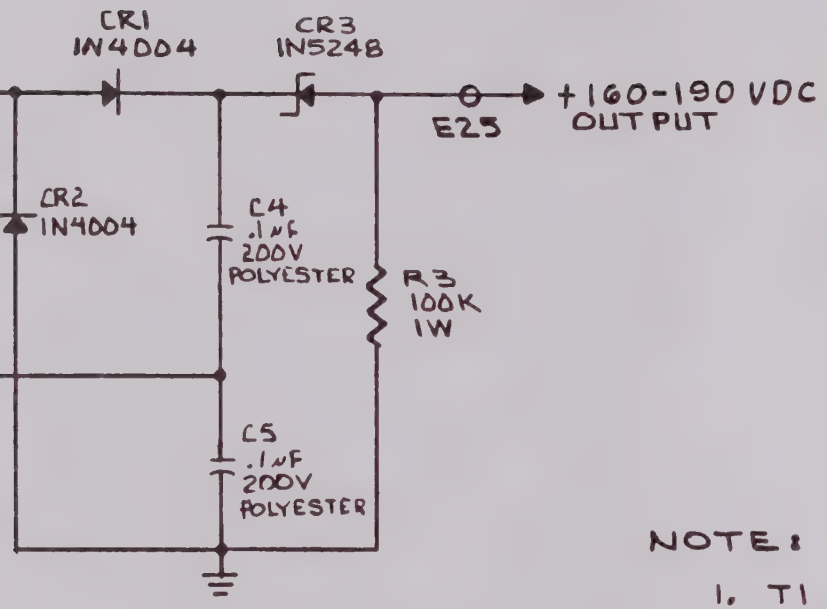

NOTE:

1. T1 IS AN ALADDIN TRANSFORMER P/N 326-0142 REV. "A"

NEXT ASS'Y	QT'Y	MODEL	ITEM	REQ'D	PART NO.	DESCRIPTION
09-0721	1	NAV402AP				
09-0721	1	NAV401L	1	1	09-0560	SCHEMATIC

APPLICATION — LIST OF MATERIALS

TOLERANCES
UNLESS OTHERWISE SPECIFIED
ALL DIMENSIONS APPLY AFTER FINISH
DECIMALS: ± .005
ANGLES: ± 1/2°
FRACTIONS: ± 1/64
SURFACE ROUGHNESS 125
REMOVE ALL BURRS

DRAWN DATE 9-13-74
CHECKED DATE 9-23-74
APPROVED DATE 9-24-74

MATERIAL
TREATMENT
FINISH

INSTRUMENT FLIGHT RESEARCH CORPORATION
WICHITA, KANSAS

TITLE: HIGH VOLTAGE POWER SUPPLY SCHEMATIC

SIZE	PART NUMBER	REV
B	0000-0956-000	D

SCALE — WEIGHT — SHEET 1 OF 1

Fig. 8-15

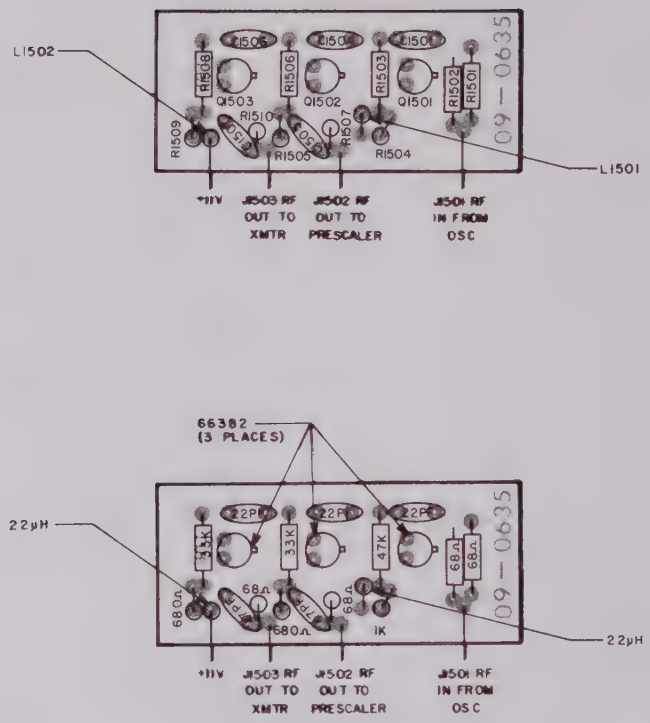

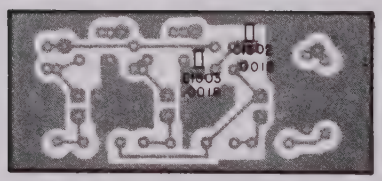

Fig. 8-16 BUFFER AMP BOARD PARTS LAYOUT

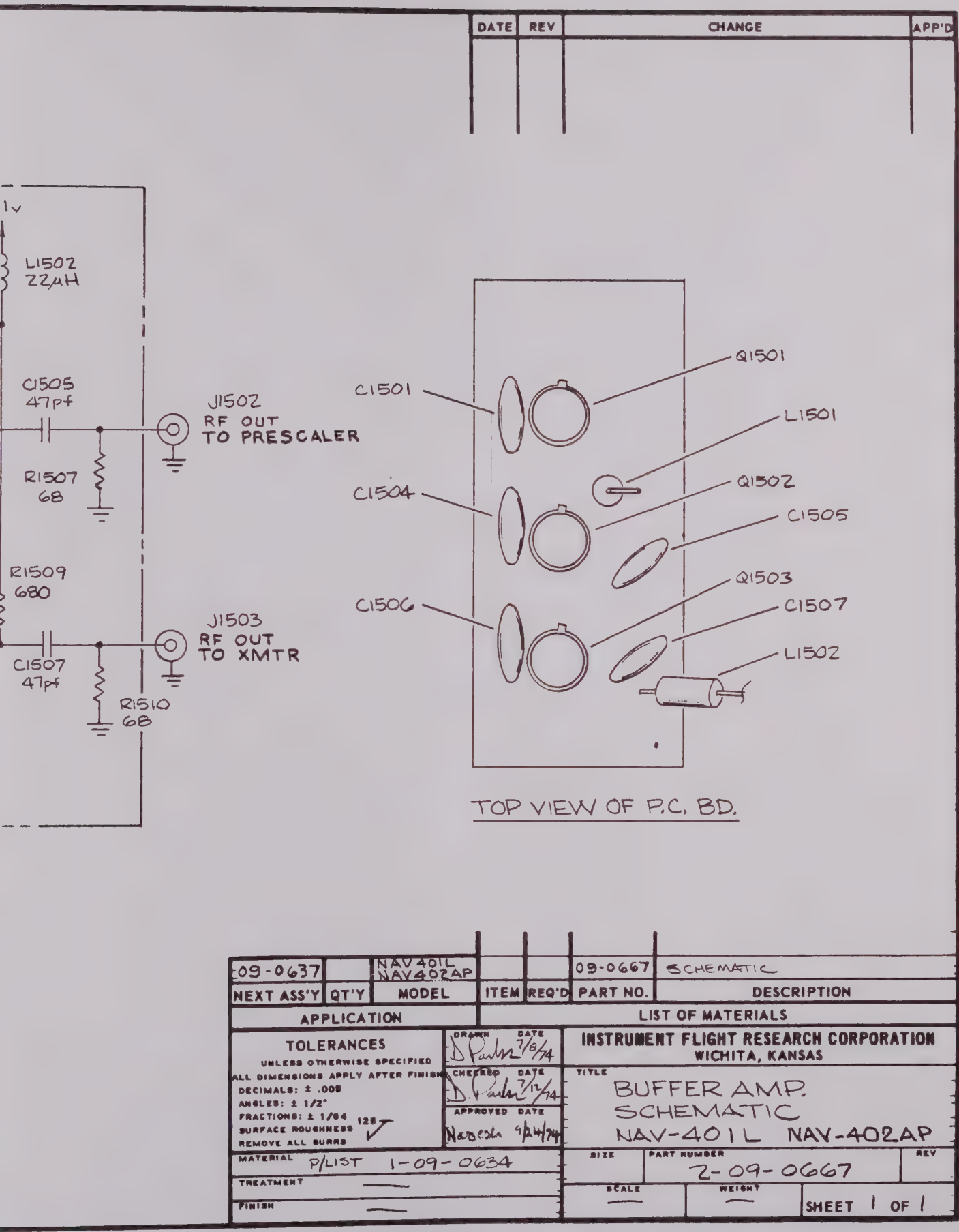
DATE
REV
CHANGE
APP'D
1v
L1502
22μH
C1505
47pf
J1502
RF OUT
TO PRESCALER
R1507
68
R1509
680
J1503
RF OUT
TO XMTR
C1507
47pf
R1510
68
C1501
C1504
C1506
Q1501
L1501
Q1502
C1505
Q1503
C1507
L1502
TOP VIEW OF P.C. BD.
09-0637
NAV401L
NAV402AP
09-0667
SCHEMATIC
NEXT ASS'Y
QT'Y
MODEL
ITEM
REQ'D
PART NO.
DESCRIPTION
APPLICATION
LIST OF MATERIALS
TOLERANCES
UNLESS OTHERWISE SPECIFIED
ALL DIMENSIONS APPLY AFTER FINISH
DECIMALS: ± .005
ANGLES: ± 1/2°
FRACTIONS: ± 1/64
SURFACE ROUGHNESS 125
REMOVE ALL BURRS
DRAWN D Parker DATE 7/8/74
CHECKED D. Parker DATE 7/12/74
APPROVED Naresh DATE 9/24/74
INSTRUMENT FLIGHT RESEARCH CORPORATION
WICHITA, KANSAS
TITLE
BUFFER AMP.
SCHEMATIC
NAV-401L NAV-402AP
MATERIAL P/LIST 1-09-0634
TREATMENT
FINISH
SIZE
PART NUMBER
2-09-0667
REV
SCALE
WEIGHT
SHEET 1 OF 1

Fig. 8-17

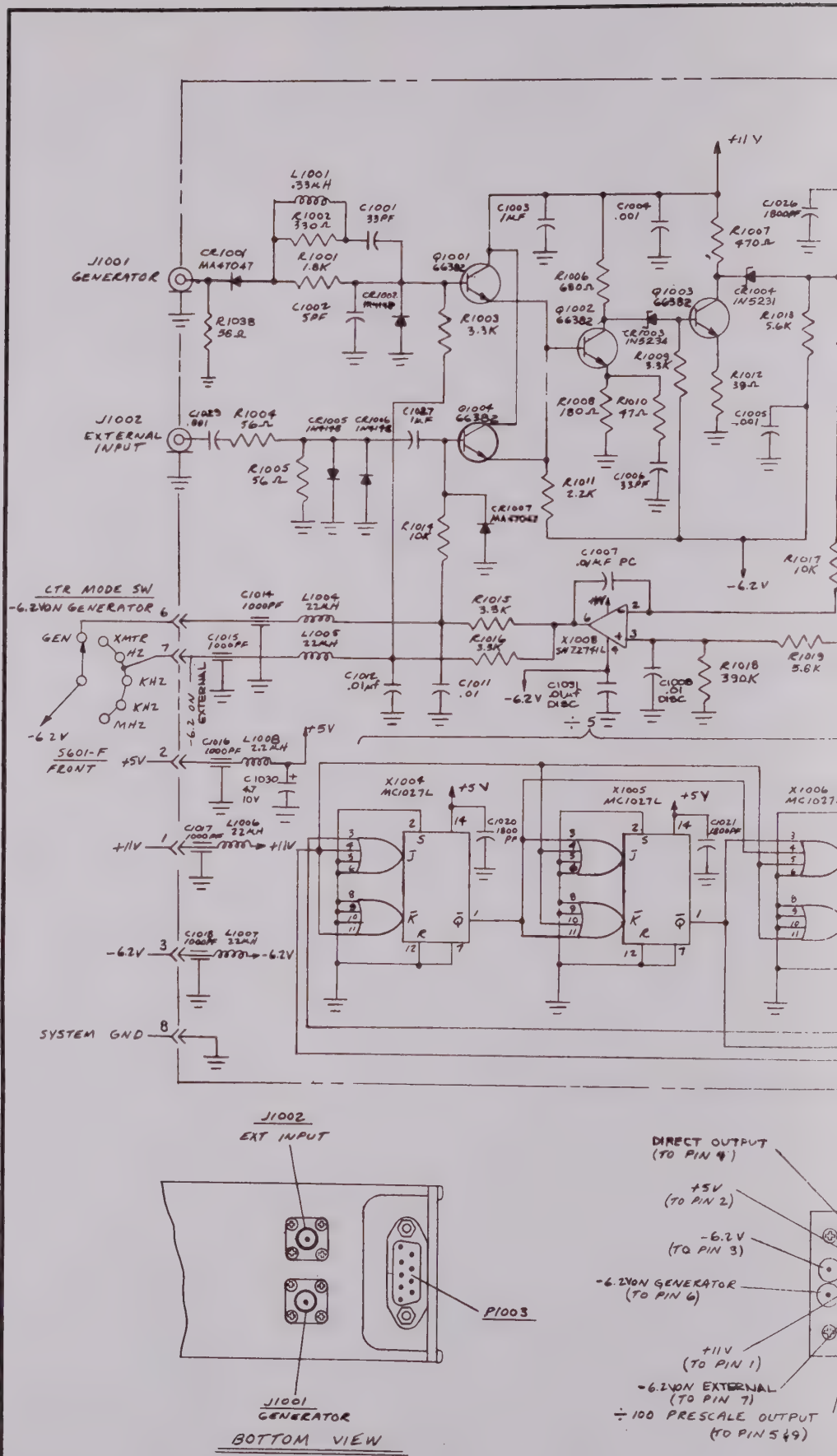

J1001 GENERATOR
J1002 EXTERNAL INPUT
CTR MODE SW
-6.2V ON GENERATOR
GEN
XMTR
HZ
KHZ
KHZ
MHZ
-6.2V
S601-F FRONT
+5V
+11V
-6.2V
SYSTEM GND
-6.2V ON EXTERNAL
+11V
-6.2V
L1001 .33μH
R1002 330Ω
C1001 33PF
R1001 1.8K
C1002 5PF
CR1001 MA47047
R1038 56Ω
Q1001 66382
R1003 3.3K
C1003 1μF
C1004 .001
R1006 680Ω
Q1002 66382
CR1003 1N5234
R1009 3.3K
R1008 180Ω
R1010 47Ω
C1006 33PF
R1011 2.2K
Q1003 66382
CR1004 1N5231
R1007 470Ω
C1026 1800PF
R1013 5.6K
R1012 39Ω
C1005 .001
R1017 10K
R1004 56Ω
R1005 56Ω
C1027 1μF
Q1004 66382
R1014 10K
CR1007 MA47047
C1007 .01μF PC
R1015 3.3K
R1016 3.3K
X1008 SN72741L
C1014 1000PF
L1004 22μH
C1015 1000PF
L1005 22μH
C1012 .01μf
C1011 .01
C1031 .01μf DISC
C1008 .01 DISC
R1018 390K
R1019 5.6K
÷ 5
C1016 1000PF
L1008 2.2μH
C1030 47 10V
C1017 1000PF
L1006 22μH
C1018 1000PF
L1007 22μH
X1004 MC1027L
X1005 MC1027L
X1006 MC1027
C1020 1800 PF
C1021 1800PF
J1002 EXT INPUT
P1003
J1001 GENERATOR
BOTTOM VIEW
DIRECT OUTPUT (TO PIN 4)
+5V (TO PIN 2)
-6.2V (TO PIN 3)
-6.2V ON GENERATOR (TO PIN 6)
+11V (TO PIN 1)
-6.2V ON EXTERNAL (TO PIN 7)
÷ 100 PRESCALE OUTPUT (TO PIN 5 & 9)

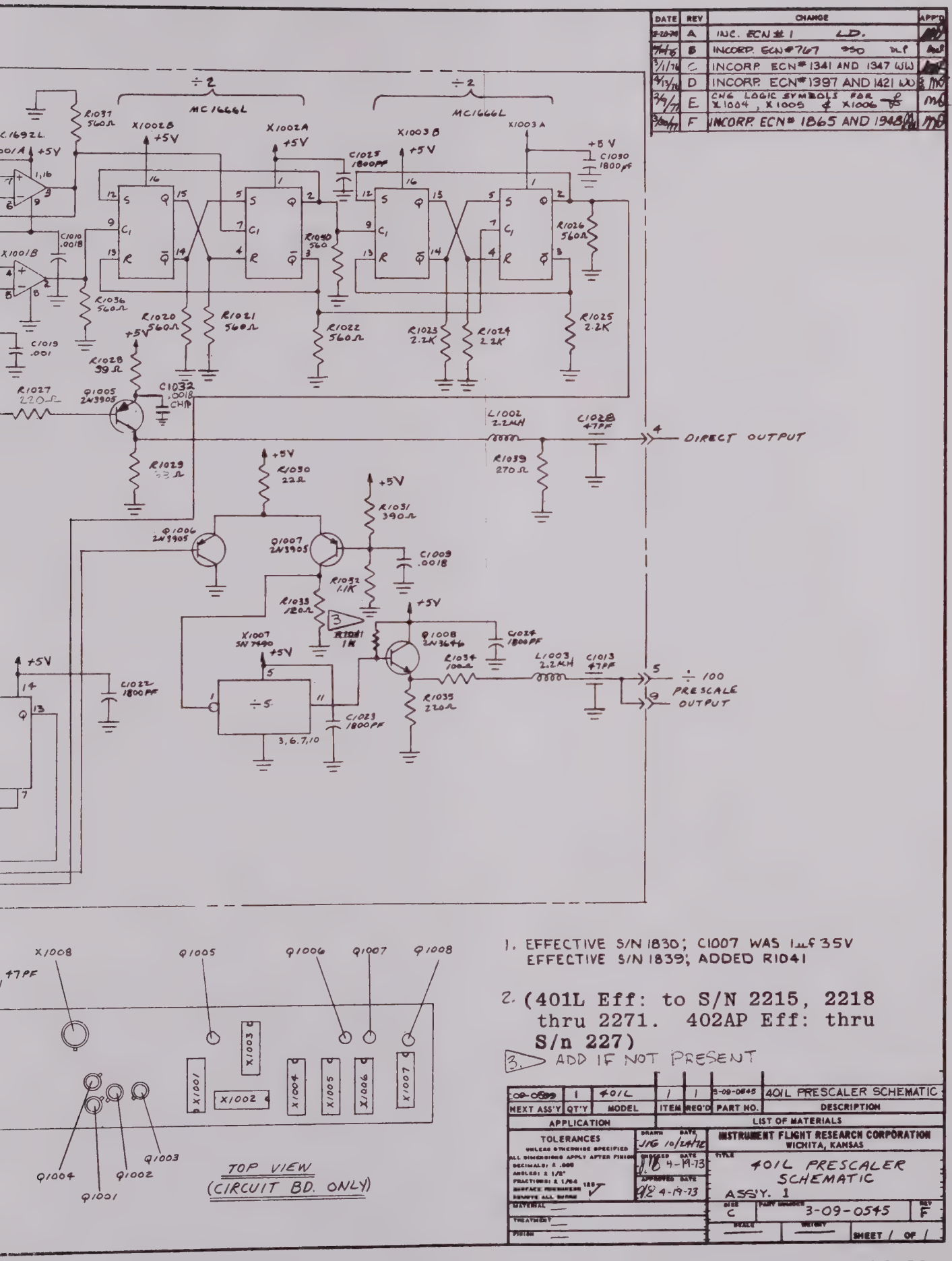

DATE | REV | CHANGE | APP'D
A | INC. ECN # 1 LD.
B | INCORP. ECN # 767 SSO DLP
C | INCORP. ECN # 1341 AND 1347 WW
D | INCORP. ECN # 1397 AND 1421 WW
E | CHG LOGIC SYMBOLS FOR X1004, X1005 & X1006
F | INCORP. ECN # 1865 AND 1948
÷2
MC1666L
X1002B
X1002A
X1003B
X1003A
+5V
R1037 560Ω
C1025 1800PF
C1030 1800PF
R1040 560
R1026 560Ω
R1036 560Ω
R1020 560Ω
R1021 560Ω
R1022 560Ω
R1023 2.2K
R1024 2.2K
R1025 2.2K
C1010 .0018
X1001B
C1019 .001
R1028 39Ω
R1027 220Ω
Q1005 2N3905
C1032 .0018 CHIP
L1002 2.2MH
C1028 47PF
DIRECT OUTPUT
R1039 270Ω
R1029
R1030 22Ω
R1031 390Ω
Q1006 2N3905
Q1007 2N3905
C1009 .0018
R1032 1.1K
R1033 120Ω
R1041 1K
X1007 SN7490
Q1008 2N3646
C1024 1800PF
R1034 100Ω
L1003 2.2MH
C1013 47PF
÷100 PRESCALE OUTPUT
C1022 1800PF
÷5
C1023 1800PF
R1035 220Ω
3,6,7,10
X1008
Q1005
Q1006
Q1007
Q1008
47PF
X1001
X1002
X1003
X1004
X1005
X1006
X1007
Q1004
Q1001
Q1002
Q1003
TOP VIEW
(CIRCUIT BD. ONLY)
1. EFFECTIVE S/N 1830; C1007 WAS 1μf 35V
EFFECTIVE S/N 1839; ADDED R1041
2. (401L Eff: to S/N 2215, 2218 thru 2271. 402AP Eff: thru S/n 227)
3. ADD IF NOT PRESENT
NEXT ASS'Y | QT'Y | MODEL | ITEM | REQ'D | PART NO. | DESCRIPTION
1 | 401L | 1 | 1 | 3-09-0545 | 401L PRESCALER SCHEMATIC
APPLICATION
LIST OF MATERIALS
TOLERANCES
UNLESS OTHERWISE SPECIFIED
ALL DIMENSIONS APPLY AFTER FINISH
DECIMALS: ± .005
ANGLES: ± 1/2°
FRACTIONS: ± 1/64
DRAWN JIG 10/24/72
CHECKED 4-19-73
APPROVED 4-19-73
INSTRUMENT FLIGHT RESEARCH CORPORATION
WICHITA, KANSAS
TITLE
401L PRESCALER SCHEMATIC
ASS'Y. 1
SIZE C
PART NUMBER 3-09-0545
REV F
SHEET 1 OF 1

Fig. 8-18

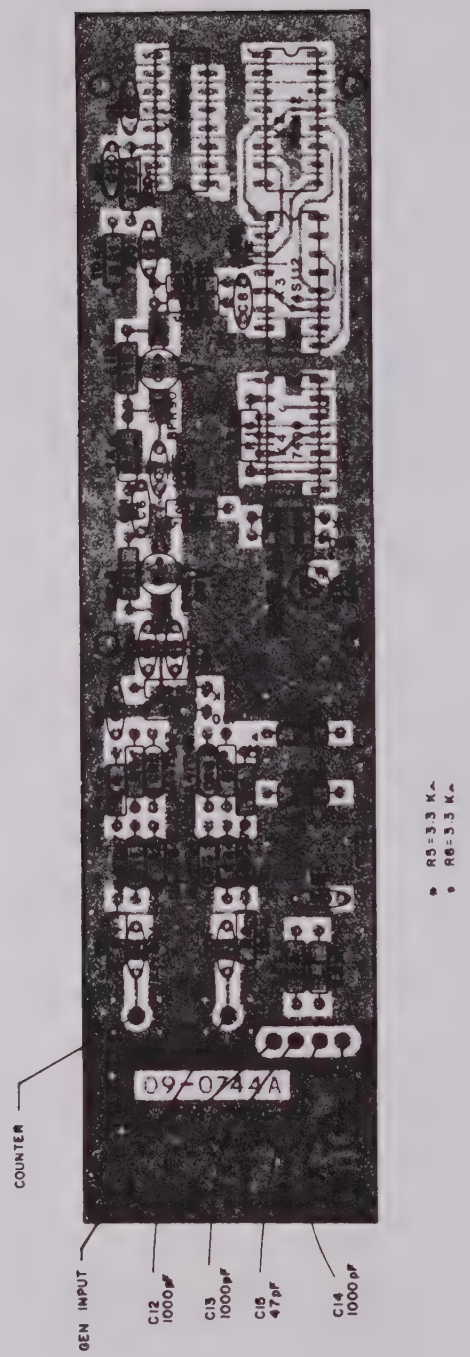

(401L - Eff: S/N 2215-2217,
2272 and on)

(402AP - Eff: S/N 228 & on)

Fig. 8-19 PRESCALER BOARD PARTS LAYOUT

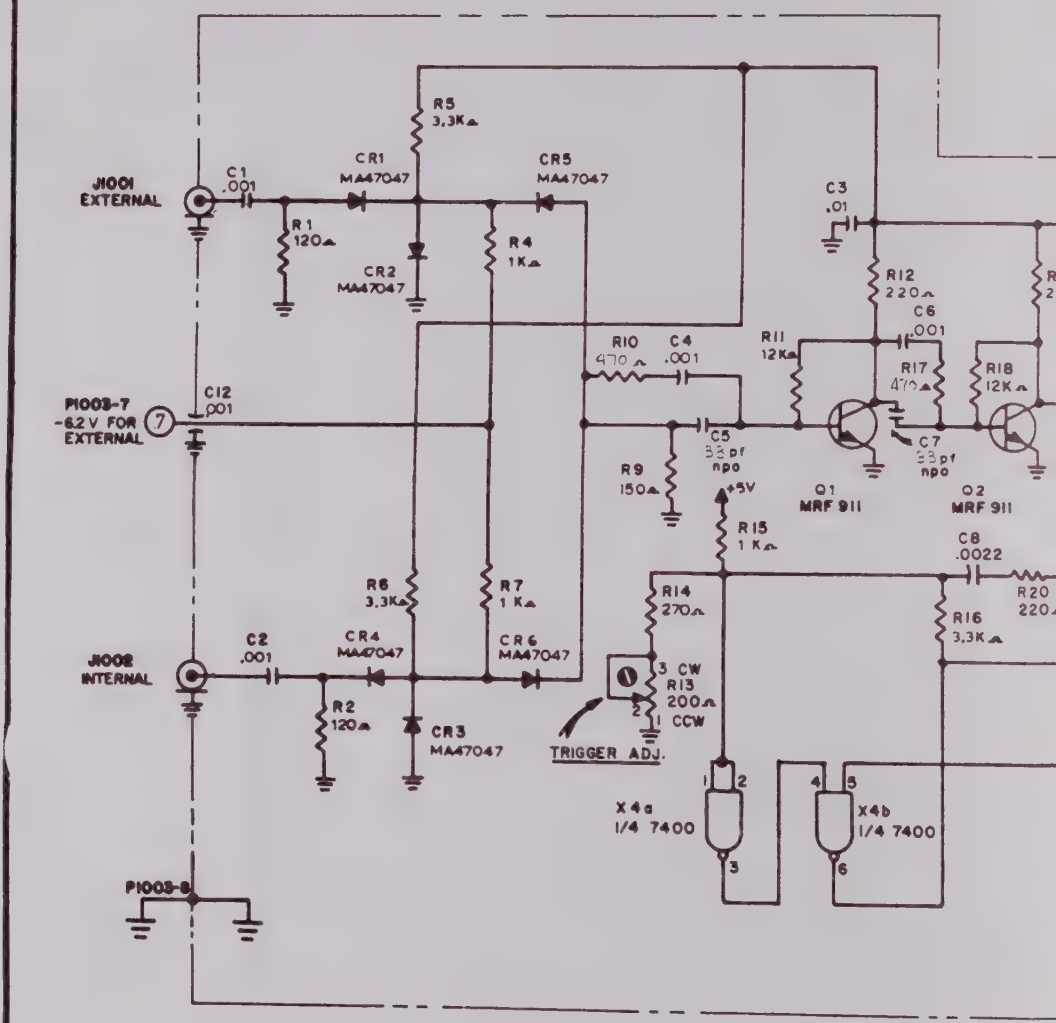
J1001
EXTERNAL
C1
.001
R1
120Ω
CR1
MA47047
CR2
MA47047
R5
3.3KΩ
R4
1KΩ
CR5
MA47047
C3
.01
R12
220Ω
C6
.001
R11
12KΩ
R10
470Ω
C4
.001
R17
470Ω
R18
12KΩ
P1003-7
-6.2 V FOR
EXTERNAL
7
C12
.001
C5
33pf
npo
C7
33pf
npo
R9
150Ω
+5V
Q1
MRF 911
Q2
MRF 911
R15
1 KΩ
C8
.0022
R20
220Ω
R14
270Ω
R16
3.3KΩ
R6
3.3KΩ
R7
1 KΩ
J1002
INTERNAL
C2
.001
CR4
MA47047
CR6
MA47047
R2
120Ω
CR3
MA47047
3 CW
R13
200Ω
2
1 CCW
TRIGGER ADJ.
X4a
1/4 7400
X4b
1/4 7400
P1003-8

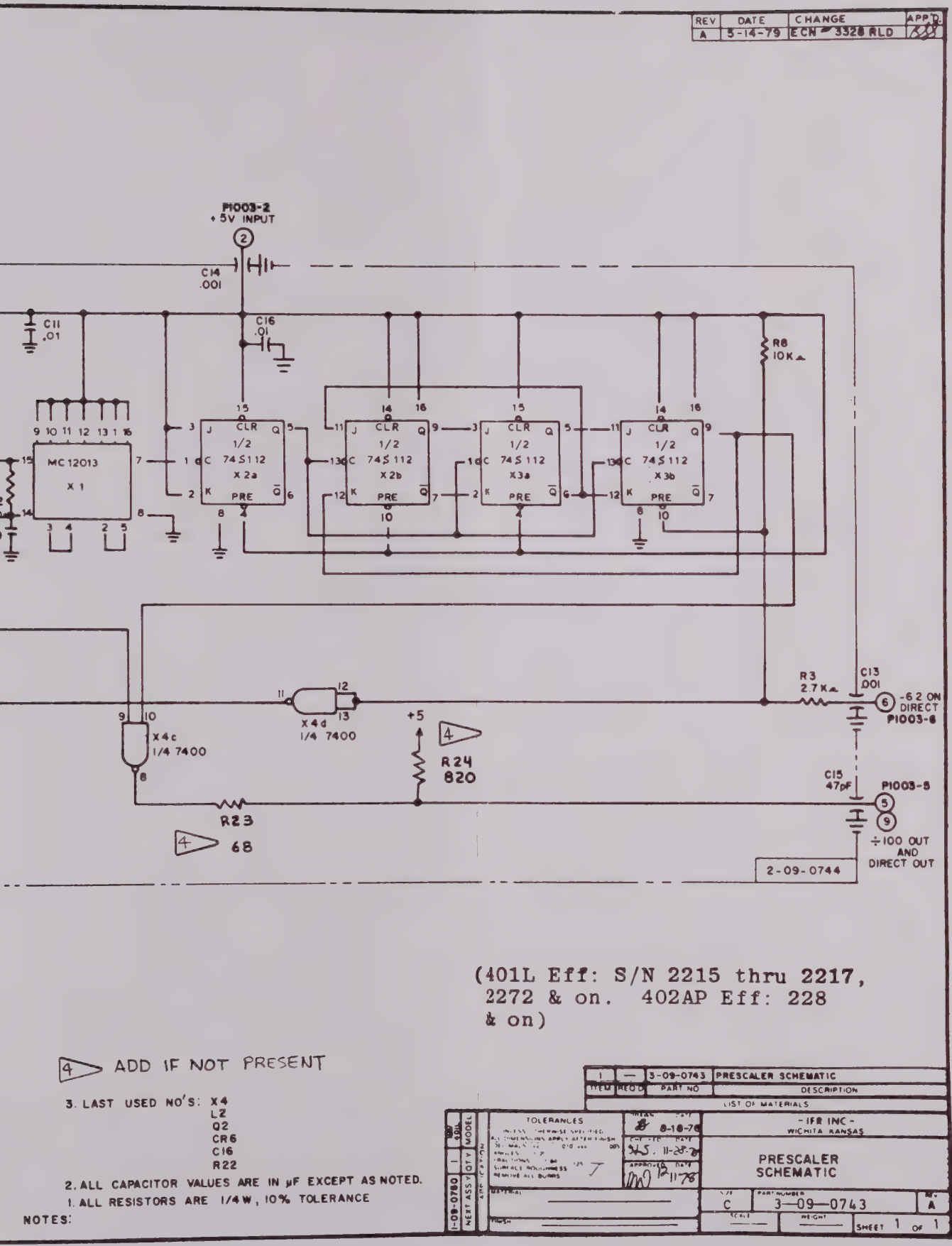

(401L Eff: S/N 2215 thru 2217, 2272 & on. 402AP Eff: 228 & on)

4 ADD IF NOT PRESENT

3. LAST USED NO'S: X4
L2
Q2
CR6
C16
R22

2. ALL CAPACITOR VALUES ARE IN μF EXCEPT AS NOTED.

1. ALL RESISTORS ARE 1/4W, 10% TOLERANCE

NOTES:

ITEM	REQD	PART NO	DESCRIPTION
1	—	3-09-0743	PRESCALER SCHEMATIC

LIST OF MATERIALS

TOLERANCES

8-18-78

11-28-78

12-11-78

- IFR INC -
WICHITA KANSAS

PRESCALER SCHEMATIC

SIZE	PART NUMBER	REV
C	3-09-0743	A

SHEET 1 OF 1

1-09-0780 | NEXT ASSY | QTY | MODEL

Fig. 8-20

PIN NO.
1. TO S10
2. 250 & 166∿ FROM COUNTER
3. FROM PRESCALER OUTPUT
4. TO VAR. FREQ. CONTROL (R10)
5. TO VARACTOR IN OSC.
6. −6.2 V
7. +11 V
8. PWR. MON. OUT
9. N.C.
10. N.C.
11. N.C.
12. SYSTEM GROUND
13. GROUND
14. N.C.
15. N.C.

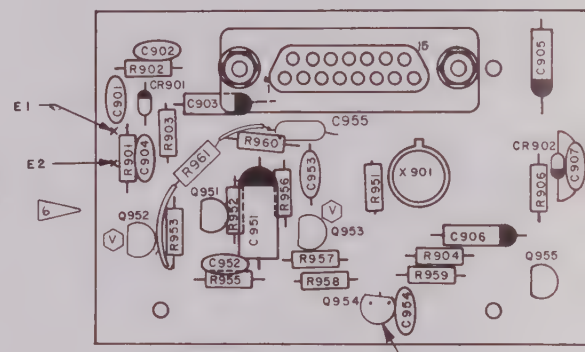

REF. DRAWINGS:
PC BD.-1-09-0465
SCHEMATIC-3-09-0438

SEE DETAIL "A"

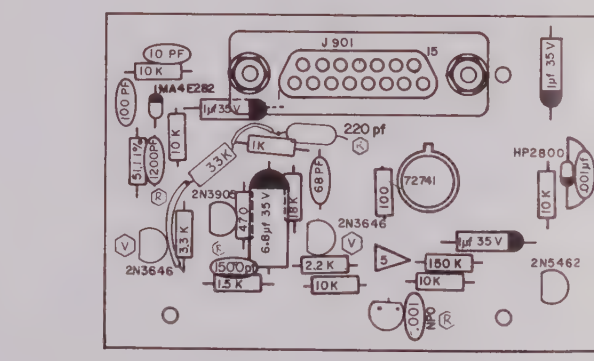

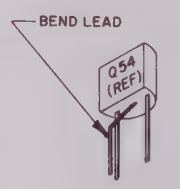

DETAIL "A"

DATE	REV	CHANGE	APP'D
6-10-78	H	ORIGINAL RELEASE	
4-4-79	J	INC. ECN 3271 RLD	
11-3-79	K	UPDATED REV LETTER 3318 RLD	
3-8-81	L	INC ECN 3636	
1-7-82	M	INC ECN 3754 O.J.	
11-23-83	N	(ITEM 2) QTY FROM 4 TO 2. INC RC # 5739 O.J.	
9/24/86	R	INC ECN 8979 DAH	VLH
1-7-87	T	INC RC9407 AO	VLH
1-29-87	U	INC ECN 9496 JS	VLH
9-21-87	V	INC RC 10312 WAW	VLH

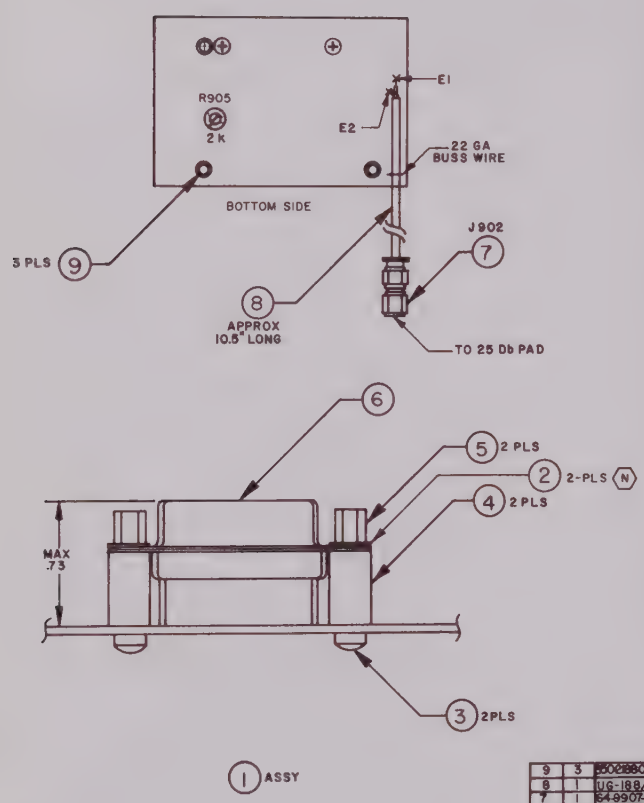

ITEM	REQ'D	PART NO.	DESCRIPTION
9	3	5502880907	'CAMBION'/EQUIV SPACER
8	1	UG-188/U	COAX
7	1	64-9907-005	'AEP'/EQUIV CONNECTOR
6	1	205736-2	'AMP'/EQUIV 15 PIN RECEPTICLE
5	2	1-76-0031-1	SHELL NUT
4	2	1-76-0001-4	STANDOFF
3	2	#4-40X1/16	SCREW
2	2	#4	LOCKWASHER
1	1	1-09-0604	ASSY

LIST OF MATERIALS

R 6 SLEEVE LEADS OF R961

5 PRIOR TO SN 2099 WAS 330 K

4. MAXIMUM HEIGHT OF COMPONENTS TO BE .35 FROM COMPONENT SIDE OF BOARD.
3. COMPONENT LEADS MAY EXTEND .04 TO .06 BEYOND BOTTOM OF BOARD AFTER SOLDERING.
2. ALL CAPACITORS ARE IN µf EXCEPT AS NOTED.
1. ALL RESISTORS ARE 1/4W, 10% TOL. EXCEPT AS NOTED.

NOTES

NEXT ASSY	QTY	MODEL
1-09-0587	1	401L

APPLICATION

TOLERANCES
UNLESS OTHERWISE SPECIFIED
ALL DIMENSIONS APPLY AFTER FINISH
DECIMAL ± .005 ± .010 .XXX ± .005
ANGLES ± 1/2°
FRACTIONS ± 1/64
SURFACE ROUGHNESS 125
REMOVE ALL BURRS

MATERIAL

FINISH

DRAWN MB DATE 6/16/78
CHECKED BWP DATE 6-20-78
APPROVED MJ DATE 6-20-78

-IFR INC-
WICHITA, KANSAS

TITLE
PHASE LOCK / POWER MONITOR ASSY

3-09-0604 NAV 401L/402

SIZE C PART NUMBER 7016-0960-400 REV V

SCALE 2X WEIGHT SHEET 1 OF 1

Fig. 8-21

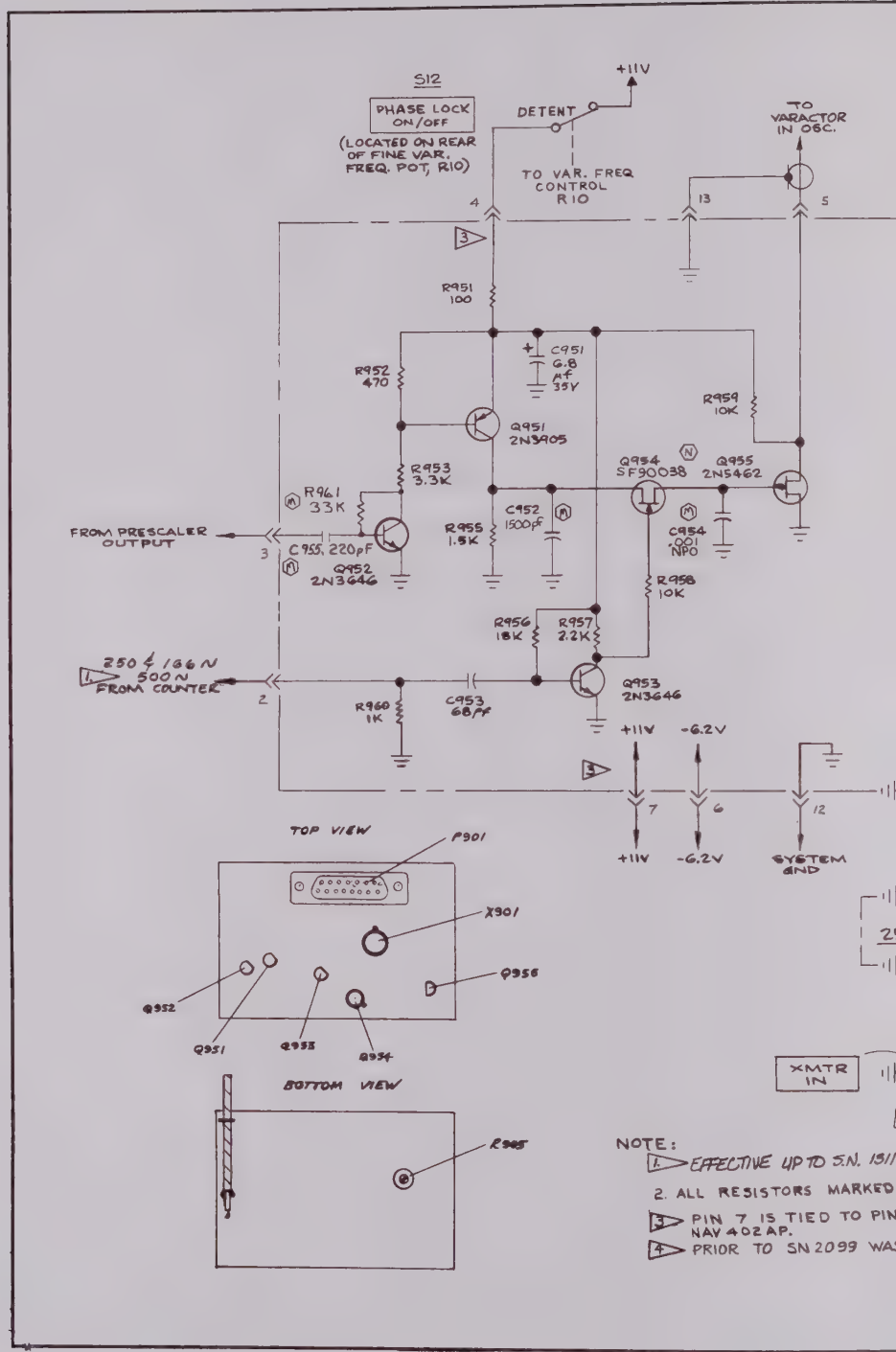
S12
PHASE LOCK ON/OFF
(LOCATED ON REAR OF FINE VAR. FREQ. POT, R10)
DETENT
+11V
TO VAR. FREQ CONTROL R10
TO VARACTOR IN OSC.
4
13
5
3
R951 100
C951 6.8 mf 35V
R952 470
Q951 2N3905
R959 10K
R953 3.3K
Q954 SF90038
Q955 2N5462
R961 33K
C952 1500pF
C954 .001 NPO
FROM PRESCALER OUTPUT
3
C955, 220pF
Q952 2N3646
R955 1.5K
R958 10K
R956 18K
R957 2.2K
250 & 166 N
500 N
FROM COUNTER
2
R960 1K
C953 68pF
Q953 2N3646
+11V
-6.2V
7
6
12
+11V
-6.2V
SYSTEM GND
TOP VIEW
P901
X901
Q956
Q952
Q951
Q953
Q954
BOTTOM VIEW
R945
XMTR IN
NOTE:
1. EFFECTIVE UP TO S.N. 1511
2. ALL RESISTORS MARKED
3. PIN 7 IS TIED TO PIN
NAV 402 AP.
4. PRIOR TO SN 2099 WAS

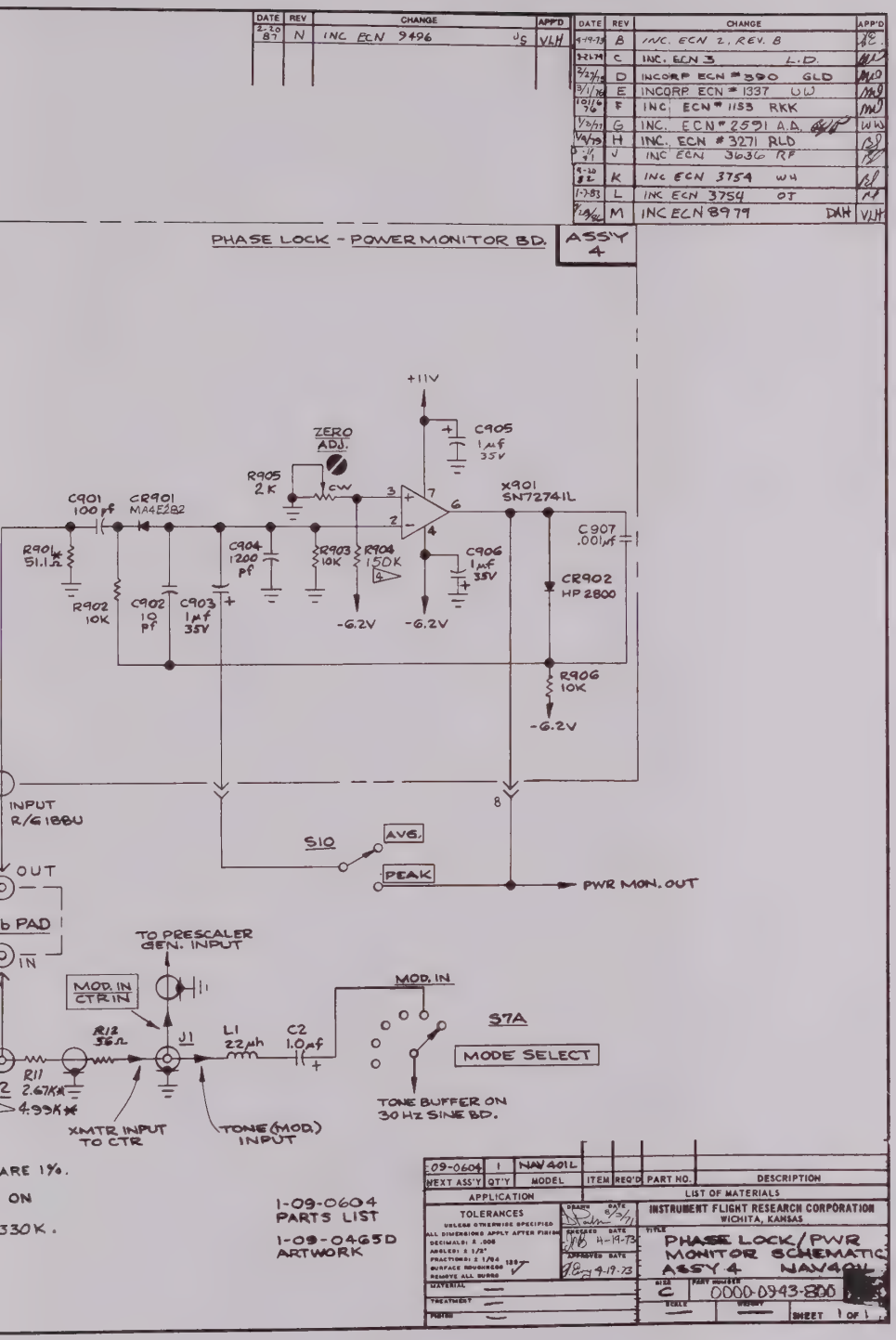

DATE REV CHANGE APP'D
2-20 87 N INC ECN 9496 VLH
DATE REV CHANGE APP'D
4-19-73 B INC. ECN 2, REV. B
2-21-74 C INC. ECN 3 L.D.
2/27/75 D INCORP ECN #390 GLD
3/1/76 E INCORP ECN #1337 UW
10/16/76 F INC. ECN #1153 RKK
1/2/77 G INC. ECN #2591 A.A.
1/4/79 H INC. ECN #3271 RLD
5-11-81 J INC ECN 3636 RF
9-20-82 K INC ECN 3754 WH
1-7-83 L INC ECN 3754 OT
9/28/86 M INC ECN 8979 DAH VLH
PHASE LOCK - POWER MONITOR BD.
ASS'Y 4
+11V
C905 1µf 35V
ZERO ADJ.
R905 2K
CW
X901 SN72741L
C901 100pf
CR901 MA4E282
C907 .001µf
R901 51.1Ω
C904 1200 pf
R903 10K
R904 150K
C906 1µf 35V
CR902 HP 2800
R902 10K
C902 10 pf
C903 1µf 35V
-6.2V
-6.2V
R906 10K
-6.2V
INPUT R/G 188U
S10
AVG.
PEAK
PWR MON. OUT
OUT
PAD
IN
TO PRESCALER GEN. INPUT
MOD. IN CTR IN
MOD. IN
S7A
MODE SELECT
R12 56Ω
J1
L1 22µh
C2 1.0µf
R11 2.67K
4.99K
XMTR INPUT TO CTR
TONE (MOD.) INPUT
TONE BUFFER ON 30 Hz SINE BD.
ARE 1%.
ON
330K.
1-09-0604 PARTS LIST
1-09-0465D ARTWORK
09-0604 1 NAV401L
NEXT ASS'Y QT'Y MODEL ITEM REQ'D PART NO. DESCRIPTION
APPLICATION
LIST OF MATERIALS
TOLERANCES
INSTRUMENT FLIGHT RESEARCH CORPORATION
WICHITA, KANSAS
PHASE LOCK/PWR MONITOR SCHEMATIC ASSY 4 NAV401L
SIZE C
0000-0943-800
SHEET 1 OF 1

Fig. 8-22

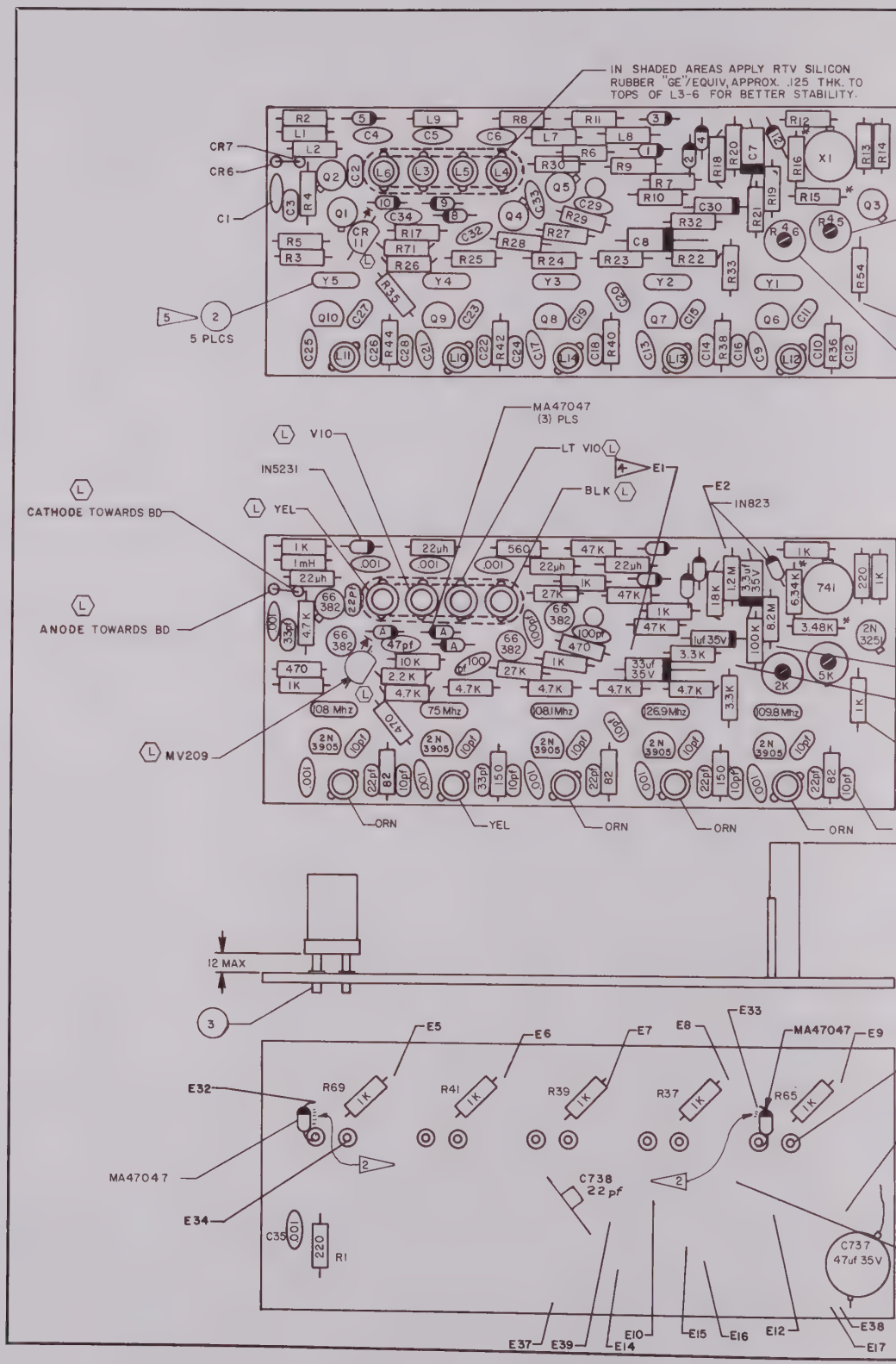
IN SHADED AREAS APPLY RTV SILICON RUBBER "GE"/EQUIV, APPROX. .125 THK. TO TOPS OF L3-6 FOR BETTER STABILITY.
CR7
CR6
C1
5 PLCS
MA47047 (3) PLS
V10
LT V10
IN5231
E1
E2
BLK
IN823
CATHODE TOWARDS BD
YEL
ANODE TOWARDS BD
MV209
ORN
YEL
ORN
ORN
ORN
12 MAX
E5
E6
E7
E8
E33
MA47047
E9
E32
R69
R41
R39
R37
R65
MA47047
E34
C738 22pf
C35
R1
C737 47uf 35V
E37
E39
E14
E10
E15
E16
E12
E38
E17

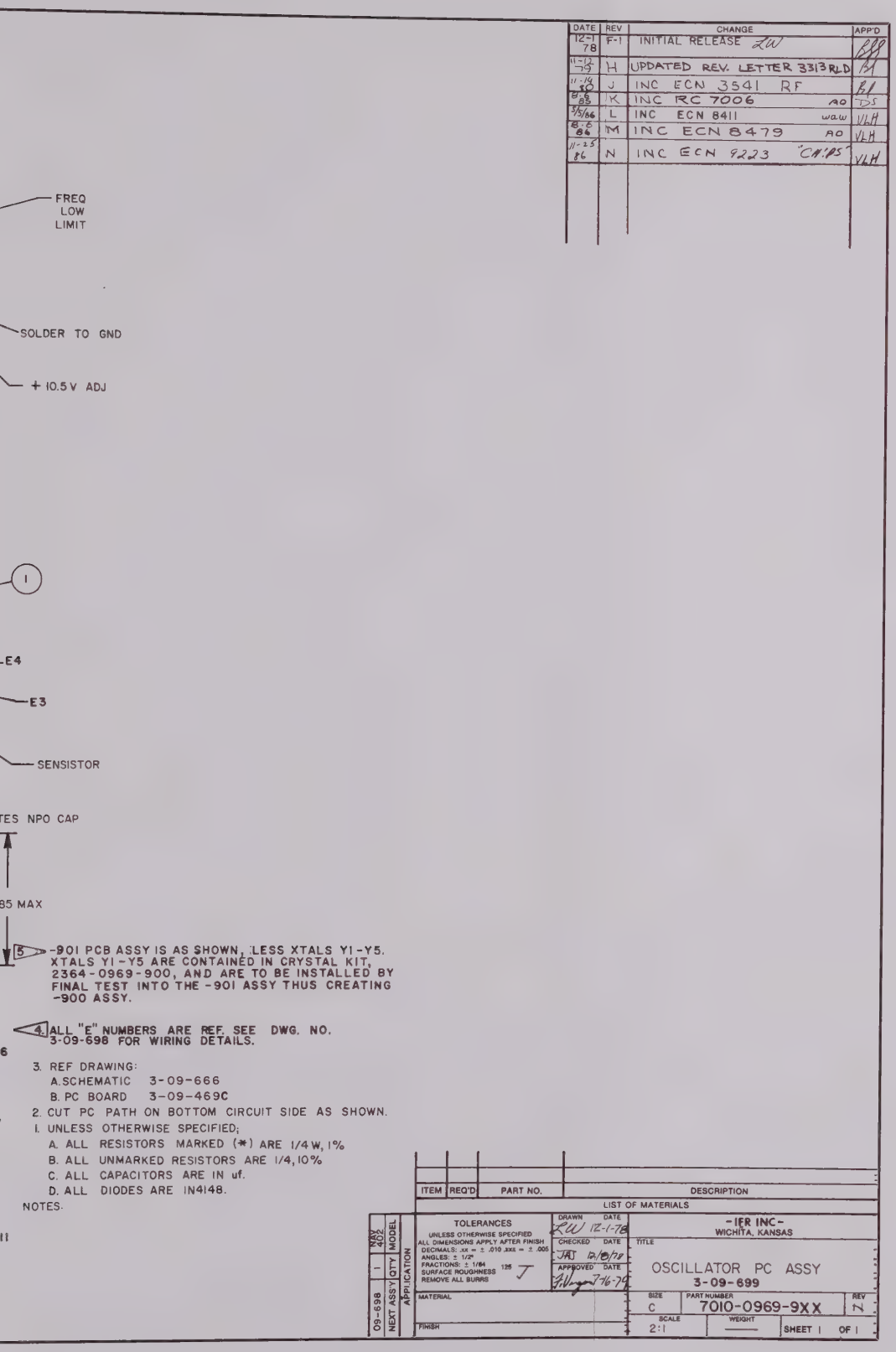
DATE | REV | CHANGE | APP'D
12-1 78 | F-1 | INITIAL RELEASE ZW
11-12 79 | H | UPDATED REV. LETTER 3313 RLD
11-14 80 | J | INC ECN 3541 RF
8-8 85 | K | INC RC 7006 AO
3/5/86 | L | INC ECN 8411 waw
8-5 86 | M | INC ECN 8479 AO
11-25 86 | N | INC ECN 9223 "CAPS"
FREQ LOW LIMIT
SOLDER TO GND
+ 10.5 V ADJ
1
E4
E3
SENSISTOR
TES NPO CAP
85 MAX
5 -901 PCB ASSY IS AS SHOWN, LESS XTALS Y1-Y5. XTALS Y1-Y5 ARE CONTAINED IN CRYSTAL KIT, 2364-0969-900, AND ARE TO BE INSTALLED BY FINAL TEST INTO THE -901 ASSY THUS CREATING -900 ASSY.
4. ALL "E" NUMBERS ARE REF. SEE DWG. NO. 3-09-698 FOR WIRING DETAILS.
6
3. REF DRAWING:
A. SCHEMATIC 3-09-666
B. PC BOARD 3-09-469C
2. CUT PC PATH ON BOTTOM CIRCUIT SIDE AS SHOWN.
1. UNLESS OTHERWISE SPECIFIED;
A. ALL RESISTORS MARKED (*) ARE 1/4 W, 1%
B. ALL UNMARKED RESISTORS ARE 1/4, 10%
C. ALL CAPACITORS ARE IN uf.
D. ALL DIODES ARE IN4148.
NOTES:
11
ITEM | REQ'D | PART NO. | DESCRIPTION
LIST OF MATERIALS
TOLERANCES
UNLESS OTHERWISE SPECIFIED
ALL DIMENSIONS APPLY AFTER FINISH
DECIMALS: .XX = ± .010 .XXX = ± .005
ANGLES: ± 1/2°
FRACTIONS: ± 1/64
SURFACE ROUGHNESS 125 J
REMOVE ALL BURRS
DRAWN DATE RW 12-1-78
CHECKED DATE JAJ 12/8/78
APPROVED DATE 12-6-79
MATERIAL
FINISH
-IER INC-
WICHITA, KANSAS
TITLE
OSCILLATOR PC ASSY
3-09-699
SIZE C
PART NUMBER 7010-0969-9XX
REV N
SCALE 2:1
WEIGHT
SHEET 1 OF 1
NAVY 402 | MODEL
1 | QTY
APPLICATION
09-698 | NEXT ASSY

Fig. 8-23

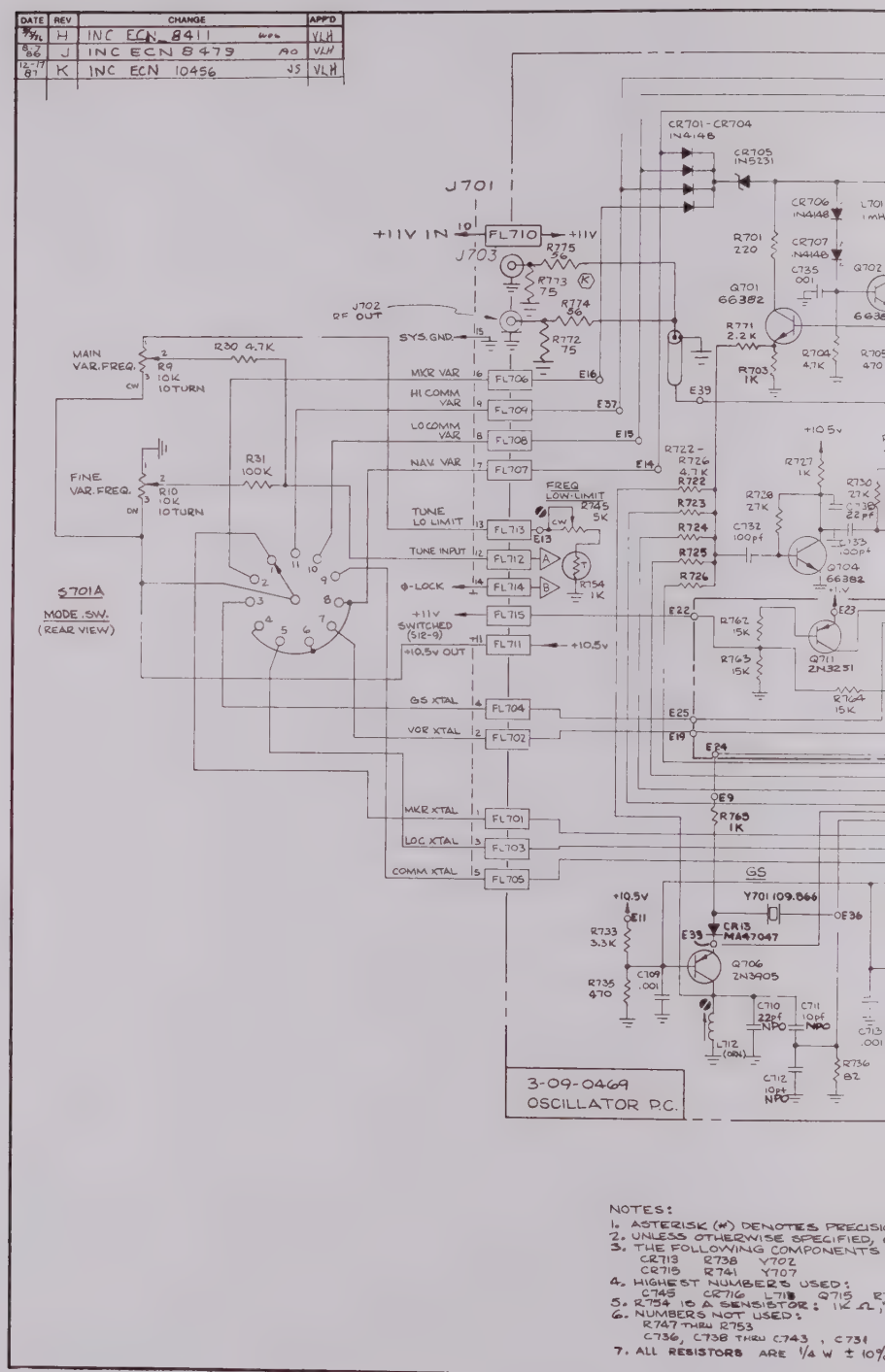

NOTES:
1. ASTERISK (*) DENOTES PRECISI
2. UNLESS OTHERWISE SPECIFIED,
3. THE FOLLOWING COMPONENTS
CR713 R738 Y702
CR715 R741 Y707
4. HIGHEST NUMBERS USED:
C745 CR716 L71 Q715 R
5. R754 IS A SENSISTOR: 1K Ω,
6. NUMBERS NOT USED:
R747 THRU R753
C736, C738 THRU C743, C731
7. ALL RESISTORS ARE 1/4 W ± 10%

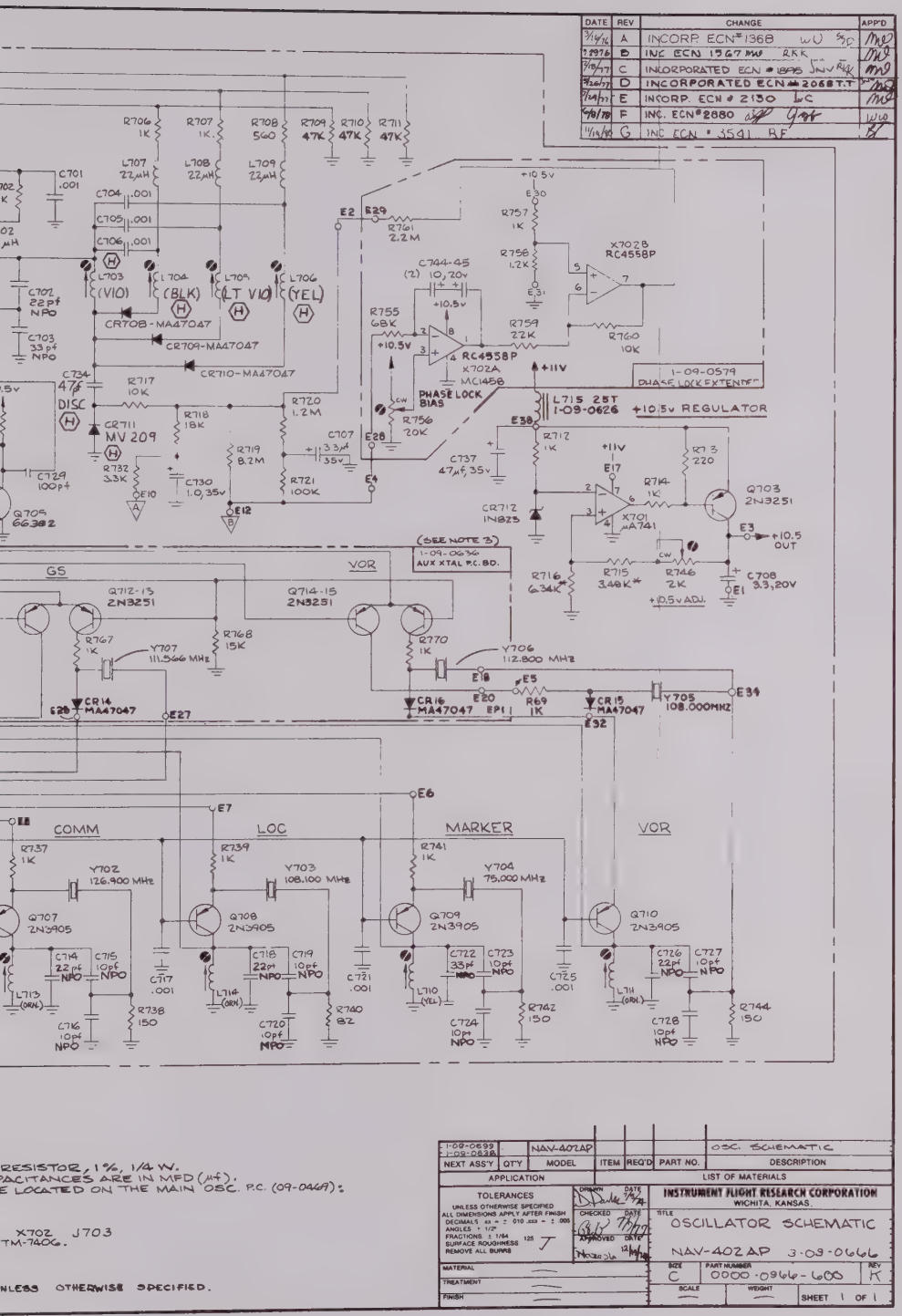
DATE REV CHANGE APP'D
A INCORP. ECN#1368
B INC ECN 1567
C INCORPORATED ECN
D INCORPORATED ECN
E INCORP. ECN # 2130
F INC. ECN#2880
G INC ECN # 3591
1-09-0579 PHASE LOCK EXTENDER
+10.5v REGULATOR
PHASE LOCK BIAS
(SEE NOTE 3)
1-09-0636 AUX XTAL P.C. BD.
+10.5v ADJ.
GS
VOR
COMM
LOC
MARKER
VOR
Y702 126.900 MHz
Y703 108.100 MHz
Y704 75.000 MHz
Y705 108.000MHz
Y706 112.800 MHz
Y707 111.366 MHz
RESISTOR, 1%, 1/4 W.
CAPACITANCES ARE IN MFD (μf).
TO BE LOCATED ON THE MAIN OSC. P.C. (09-0469).
X702 J703
TM-740G.
UNLESS OTHERWISE SPECIFIED.
1-09-0699
1-09-0538
NAV-402AP
OSC. SCHEMATIC
NEXT ASS'Y QTY MODEL ITEM REQ'D PART NO. DESCRIPTION
APPLICATION
LIST OF MATERIALS
TOLERANCES
UNLESS OTHERWISE SPECIFIED
ALL DIMENSIONS APPLY AFTER FINISH
DECIMALS .XX = ± .010 .XXX = ± .005
ANGLES ± 1/2°
FRACTIONS ± 1/64
SURFACE ROUGHNESS 125
REMOVE ALL BURRS
DRAWN
CHECKED
APPROVED
INSTRUMENT FLIGHT RESEARCH CORPORATION
WICHITA, KANSAS.
TITLE
OSCILLATOR SCHEMATIC
NAV-402AP 3-09-0666
MATERIAL
TREATMENT
FINISH
SIZE C
PART NUMBER 0000-0966-600
REV K
SCALE
WEIGHT
SHEET 1 OF 1

Fig. 8-24

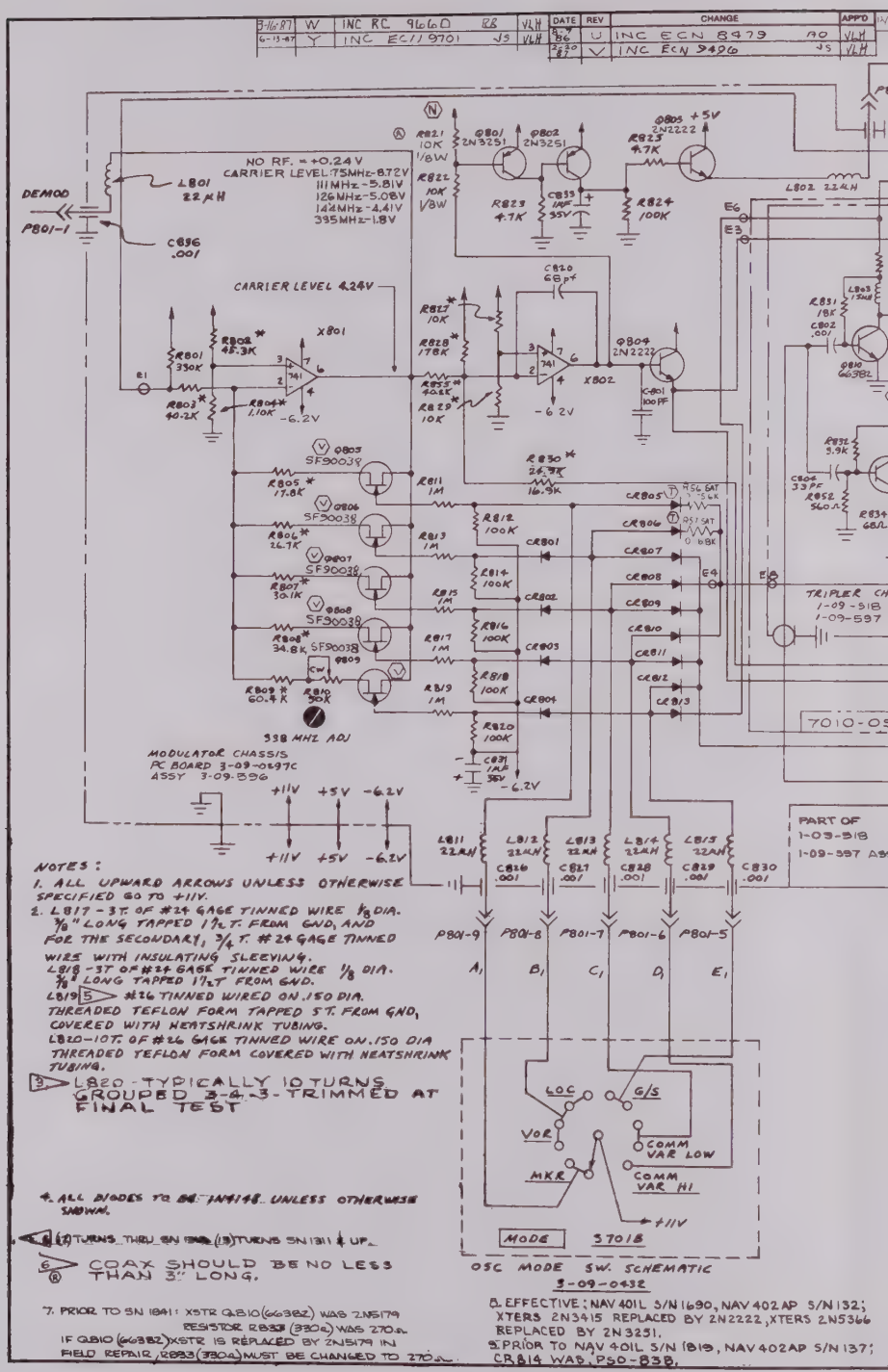

8-16-87	W	INC RC 9660	RB	VLH	DATE	REV	CHANGE	APP'D
6-13-87	Y	INC ECN 9701	JS	VLH	8-16-87	U	INC ECN 8979	AO VLH
					2-20-87	V	INC ECN 9496	JS VLH

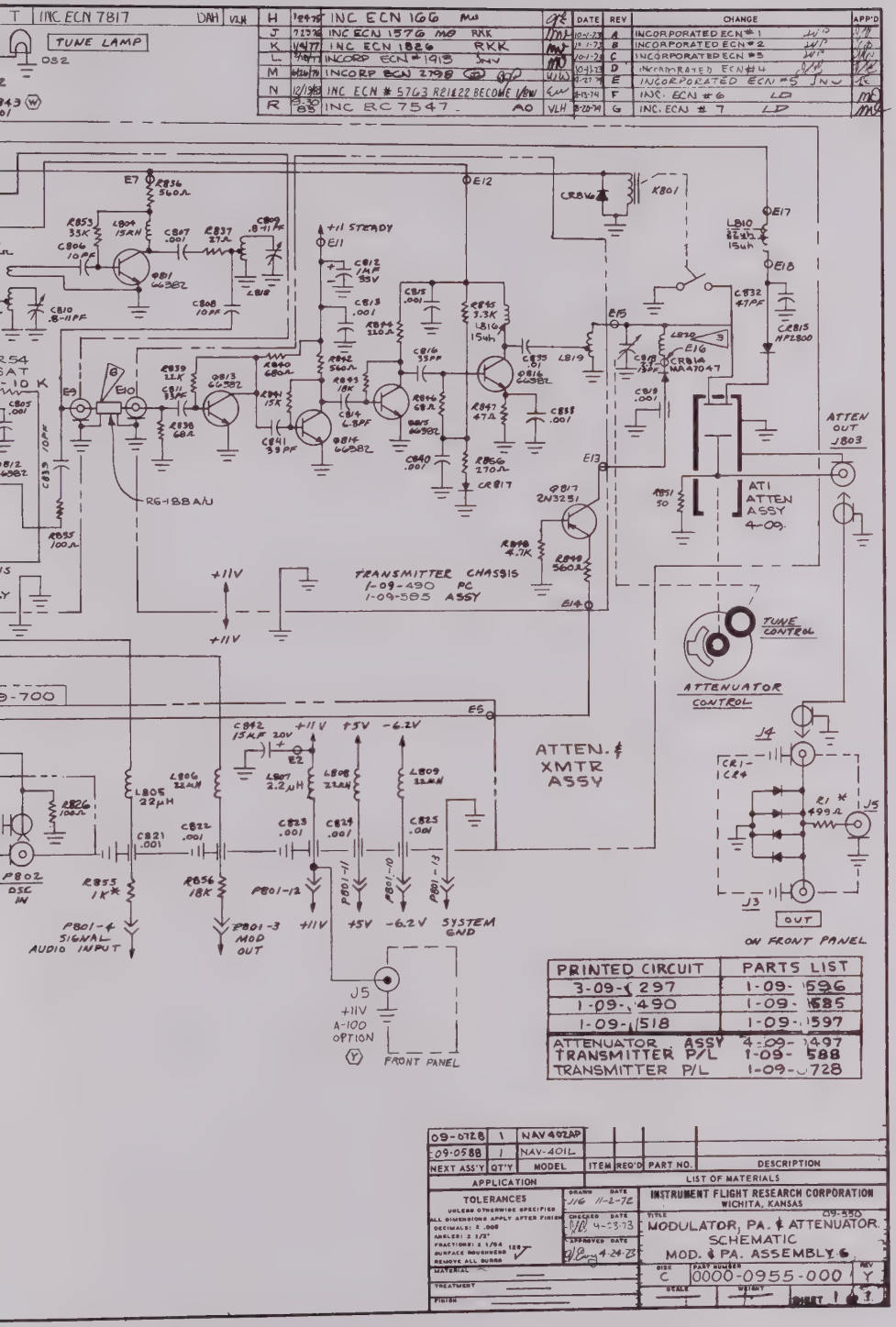
INC ECN 7817
TUNE LAMP
DS2
INC ECN 166
INC ECN 1576
INC ECN 1826
INCORP ECN #1915
INCORP ECN 2798
INC ECN # 5763 R21&22 BECOME 1/8W
INC RC 7547
INCORPORATED ECN #1
INCORPORATED ECN #2
INCORPORATED ECN #3
INCORPORATED ECN #4
INCORPORATED ECN #5
INC. ECN #6
INC. ECN # 7
+11 STEADY
TRANSMITTER CHASSIS
1-09-490 PC
1-09-585 ASSY
ATTEN OUT J803
AT1 ATTEN ASSY 4-09
TUNE CONTROL
ATTENUATOR CONTROL
ATTEN. & XMTR ASSY
OUT
ON FRONT PANEL
P801-4 SIGNAL AUDIO INPUT
P801-3 MOD OUT
SYSTEM GND
J5 +11V A-100 OPTION
FRONT PANEL
PRINTED CIRCUIT
PARTS LIST
3-09-297
1-09-596
1-09-490
1-09-585
1-09-518
1-09-597
ATTENUATOR ASSY 4-09-497
TRANSMITTER P/L 1-09-588
TRANSMITTER P/L 1-09-728
09-0728 1 NAV 402AP
09-0588 1 NAV-401L
NEXT ASS'Y QT'Y MODEL ITEM REQ'D PART NO. DESCRIPTION
APPLICATION
LIST OF MATERIALS
TOLERANCES
INSTRUMENT FLIGHT RESEARCH CORPORATION
WICHITA, KANSAS
MODULATOR, PA. & ATTENUATOR
SCHEMATIC
MOD. & PA. ASSEMBLY 6
0000-0955-000

Fig. 8-26

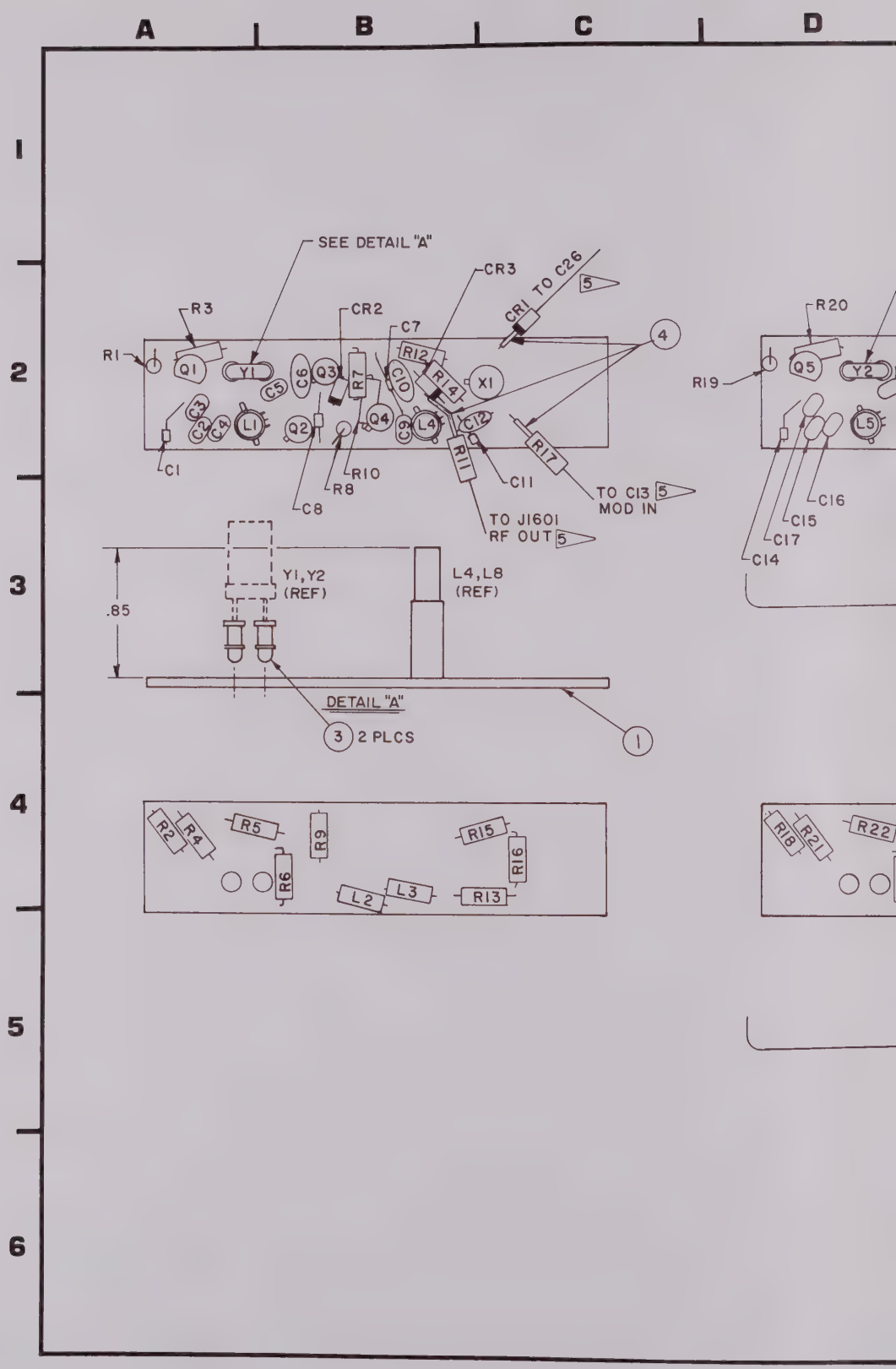
A
B
C
D
1
2
3
4
5
6
SEE DETAIL "A"
CR3
CR1
TO C26
5
R3
CR2
C7
R1
Q1
Y1
C5
C6
Q3
R7
R12
R14
C10
X1
4
C3
C2
C4
L1
Q2
Q4
C9
L4
C12
R11
R17
C1
R8
R10
C8
C11
TO C13
MOD IN
5
TO J1601
RF OUT
5
R20
R19
Q5
Y2
L5
C16
C15
C17
C14
.85
Y1, Y2
(REF)
L4, L8
(REF)
DETAIL "A"
3
2 PLCS
1
R2
R4
R5
R9
R15
R16
R6
L2
L3
R13
R18
R21
R22

E F G H

DATE	REV	CHANGE	APVD
6-22-78	B	ORIGINAL RELEASE (M)	MD
11-12-78	C	UPDATED REV LETTER 3313 RLD	BL
3-6-81	D	INC ECN 3576 RF	
12-3-86	D	REDRAWN-UPDATED AO	SAR
3-11-87	D-1	INC ECN 9585 AO	VLH
6-3-87	D-2	INC ECN 9894 JS	VLH

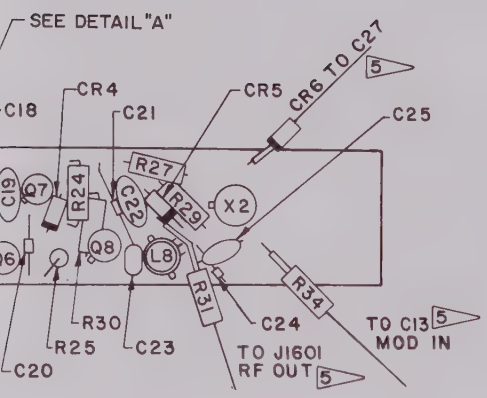

6
(2)

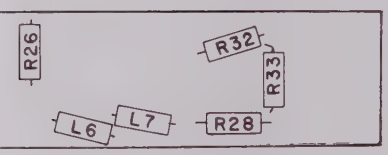

6
(2)

STANDARDS:

1. ALL REFERENCE DESIGNATORS CARRY AN ASSIGNED DESIGNATOR SERIES. THIS DRAWING CARRIES SERIES 1600 (ie R1 IS R1601).
2. COMPONENT LEADS MAY EXTEND .04-.06 BEYOND BOTTOM OF BOARD AFTER SOLDERING. COMPONENTS ON BOTTOM OF BOARDS HAVE LEADS TRIMMED FLUSH WITH TOP SURFACE.
3. MAXIMUM HEIGHT OF COMPONENTS TO BE .85.
4. REF DWG:
   P C BOARD 1700-0965-500
   SCHEMATIC 0000-0965-800

5 REF 7039-0965-400

6 NEXT ASS'Y (7039) REQUIRES (2) DUAL LOCALIZER ASSY'S AT MECH LEVEL. EACH ASS'Y REQUIRES ITS OWN SET OF REF DESIGNATORS. FOR TRACKING PURPOSES, BOTH SETS OF DESIGNATORS ARE SHOWN.

TOLERANCES: (UNLESS OTHERWISE SPECIFIED)
ALL DIMENSIONS APPLY AFTER FINISH
TOLERANCES: DECIMALS .xx ± .xxx ± ANGLES ±
SURFACE FINISH: REMOVE ALL BURRS

MATERIAL ~
FINISH ~

IFR SYSTEMS INC
10200 West York St. Wichita, Kansas 67215

DRAWN	JENKINS	DATE 6-21-78
CHECKED	CJP	DATE 7-5-78
APPROVED	MD	DATE 12-13-78

TITLE: DUAL LOCALIZER/TRANSMITTER PC BOARD ASSY
3-09-655

SIZE C | DWG. NO. 7010-0965-500 | REV D-2

SCALE: 2:1 OR AS NOTED | DO NOT SCALE THIS DRAWING | FSCM CODE 51180 | SHEET | OF |

Fig. 8-27

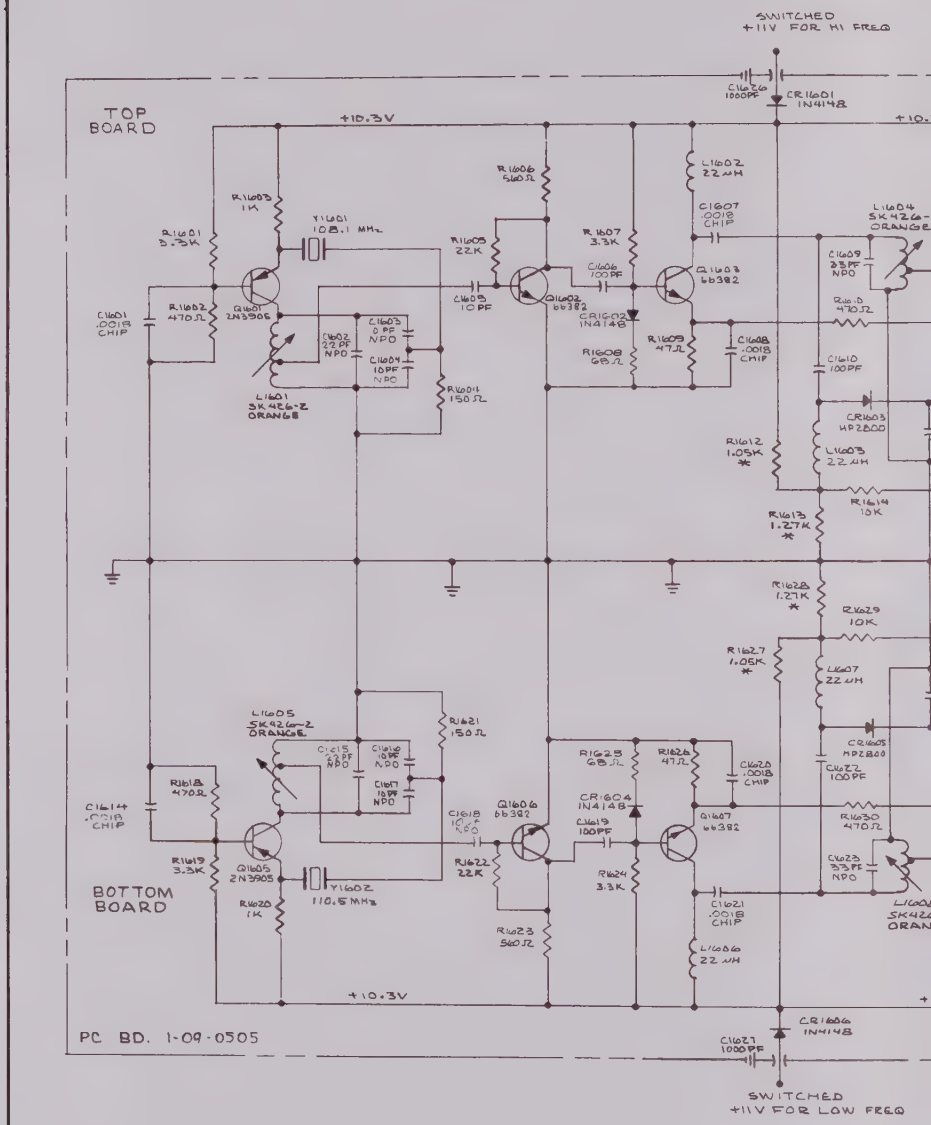
SWITCHED
+11V FOR HI FREQ
C1626
1000PF
CR1601
IN4148
TOP
BOARD
+10.3V
R1606
560Ω
L1602
22 uH
R1603
1K
Y1601
108.1 MHz
C1607
.0018
CHIP
L1604
SK4226-2
ORANGE
R1601
3.3K
R1605
22K
R1607
3.3K
C1609
33PF
NPO
C1601
.0018
CHIP
R1602
470Ω
Q1601
2N3906
C1606
100PF
Q1603
66382
Q1602
66382
C1605
10 PF
CR1603
IN2148
R1609
47Ω
C1608
.0018
CHIP
C1610
100PF
C1602
22 PF
NPO
C1603
0 PF
NPO
C1604
10PF
NPO
R1608
68Ω
L1601
SK4226-2
ORANGE
R1611
150Ω
CR1603
MPZ800
R1612
1.05K
*
L1603
2.2 uH
R1614
10K
R1613
1.27K
*
R1628
1.27K
*
R1629
10K
R1627
1.05K
*
L1607
22 uH
L1605
SK4226-2
ORANGE
R1621
150Ω
C1615
22PF
NPO
C1616
10PF
NPO
C1617
10PF
NPO
R1625
68Ω
R1626
47Ω
C1620
.0018
CHIP
CR1605
MPZ800
C1622
100PF
R1618
470Ω
C1614
.0018
CHIP
C1618
10PF
NPO
Q1606
66382
CR1604
IN4148
R1630
470Ω
Q1607
66382
C1619
100PF
R1619
3.3K
Q1605
2N3905
Y1602
110.5 MHz
R1622
22K
R1624
3.3K
C1623
33PF
NPO
L1606
SK4226-2
ORANGE
BOTTOM
BOARD
R1620
1K
C1621
.0018
CHIP
R1623
560Ω
L1606
22 uH
+10.3V
CR1606
IN4148
C1627
1000PF
PC BD. 1-09-0505
SWITCHED
+11V FOR LOW FREQ

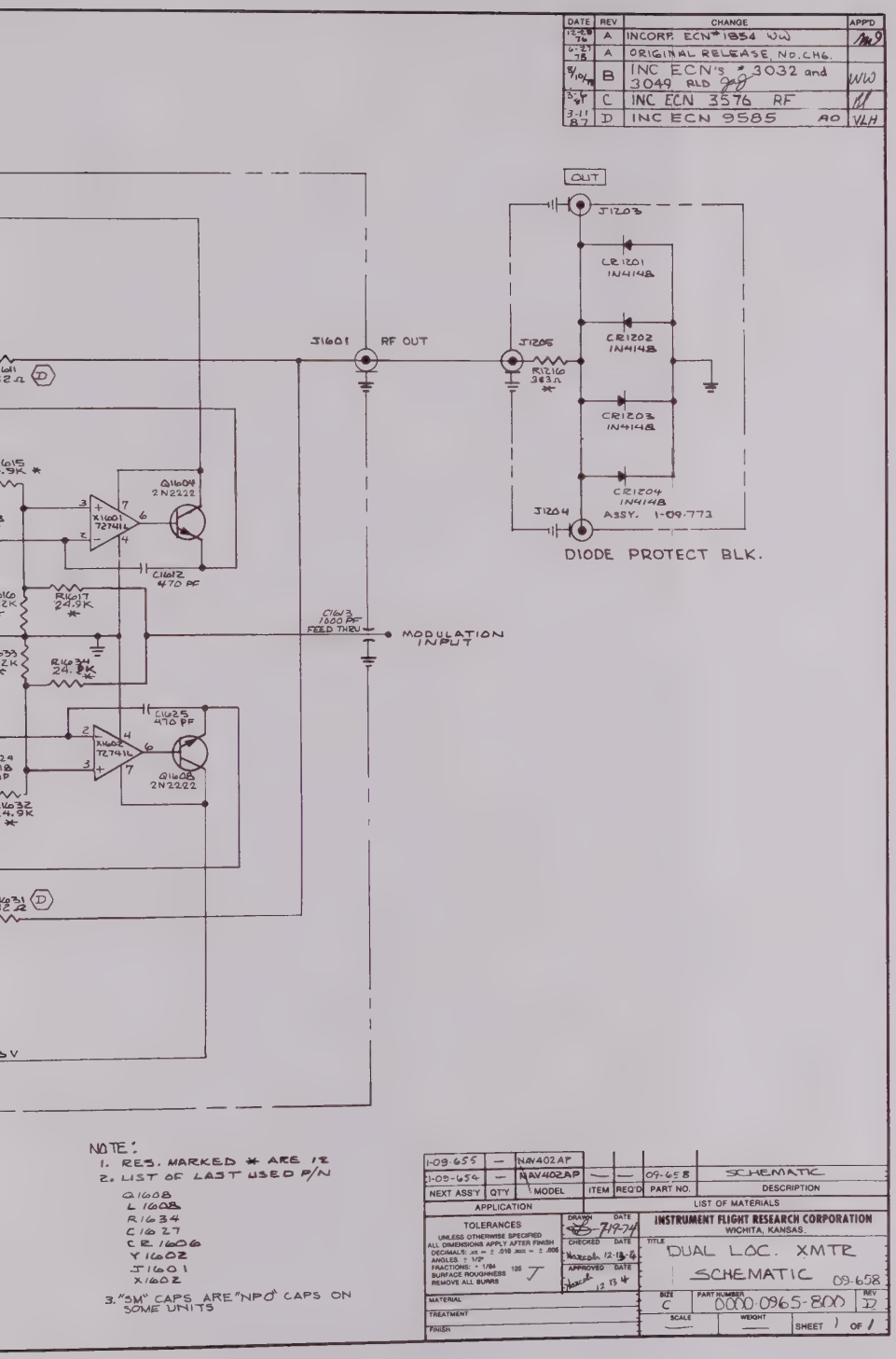

DATE	REV.	CHANGE	APP'D
12-28-76	A	INCORP. ECN* 1854 VW	
6-29-78	A	ORIGINAL RELEASE. NO. CH6.	
8/10/78	B	INC ECN's # 3032 and 3049 RLD	WW
3-6-87	C	INC ECN 3576 RF	
3-11-87	D	INC ECN 9585 AO	VLH

NOTE:
1. RES. MARKED * ARE 1%
2. LIST OF LAST USED P/N
   - Q1608
   - L1608
   - R1634
   - C1627
   - CR1606
   - Y1602
   - J1601
   - X1602
3. "SM" CAPS ARE "NPO" CAPS ON SOME UNITS

1-09-655	—	NAV402AP			09-658	SCHEMATIC
1-09-654	—	NAV402AP	—	—		
NEXT ASS'Y	QTY	MODEL	ITEM	REQ'D	PART NO.	DESCRIPTION

APPLICATION — LIST OF MATERIALS

TOLERANCES: UNLESS OTHERWISE SPECIFIED ALL DIMENSIONS APPLY AFTER FINISH. DECIMALS: .XX = ± .010 .XXX = ± .005. ANGLES ± 1/2°. FRACTIONS: ± 1/64. SURFACE ROUGHNESS 125. REMOVE ALL BURRS.

MATERIAL — TREATMENT — FINISH

DRAWN 7-19-74 — CHECKED 12-15-76 — APPROVED 12-13-76

INSTRUMENT FLIGHT RESEARCH CORPORATION
WICHITA, KANSAS.

TITLE: DUAL LOC. XMTR SCHEMATIC 09-658

SIZE C — PART NUMBER 0000 0965-800 — REV D

SCALE — WEIGHT — SHEET 1 OF 1

Fig. 8-28

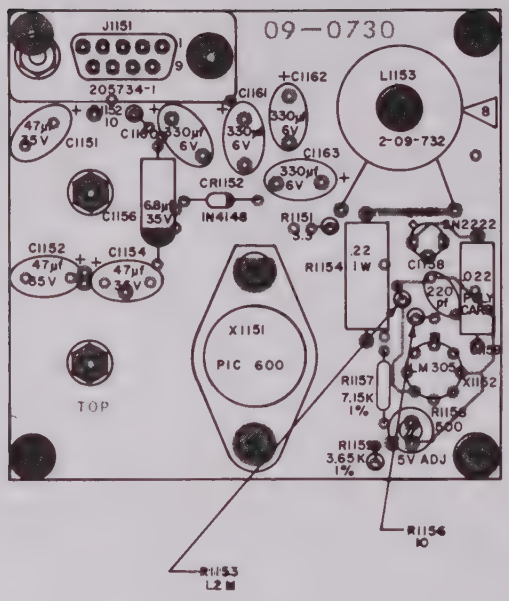

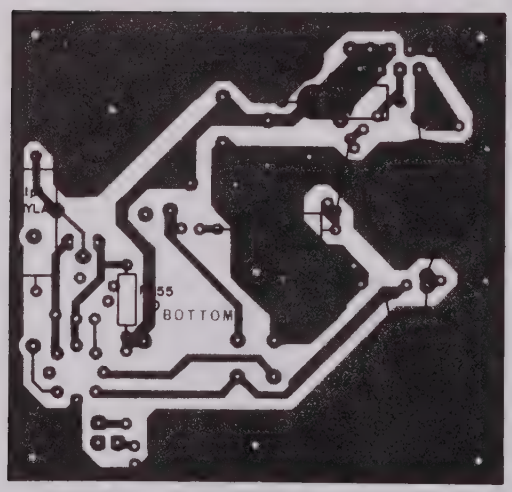

Fig. 8-29 5 VOLT REGULATOR PARTS LAYOUT

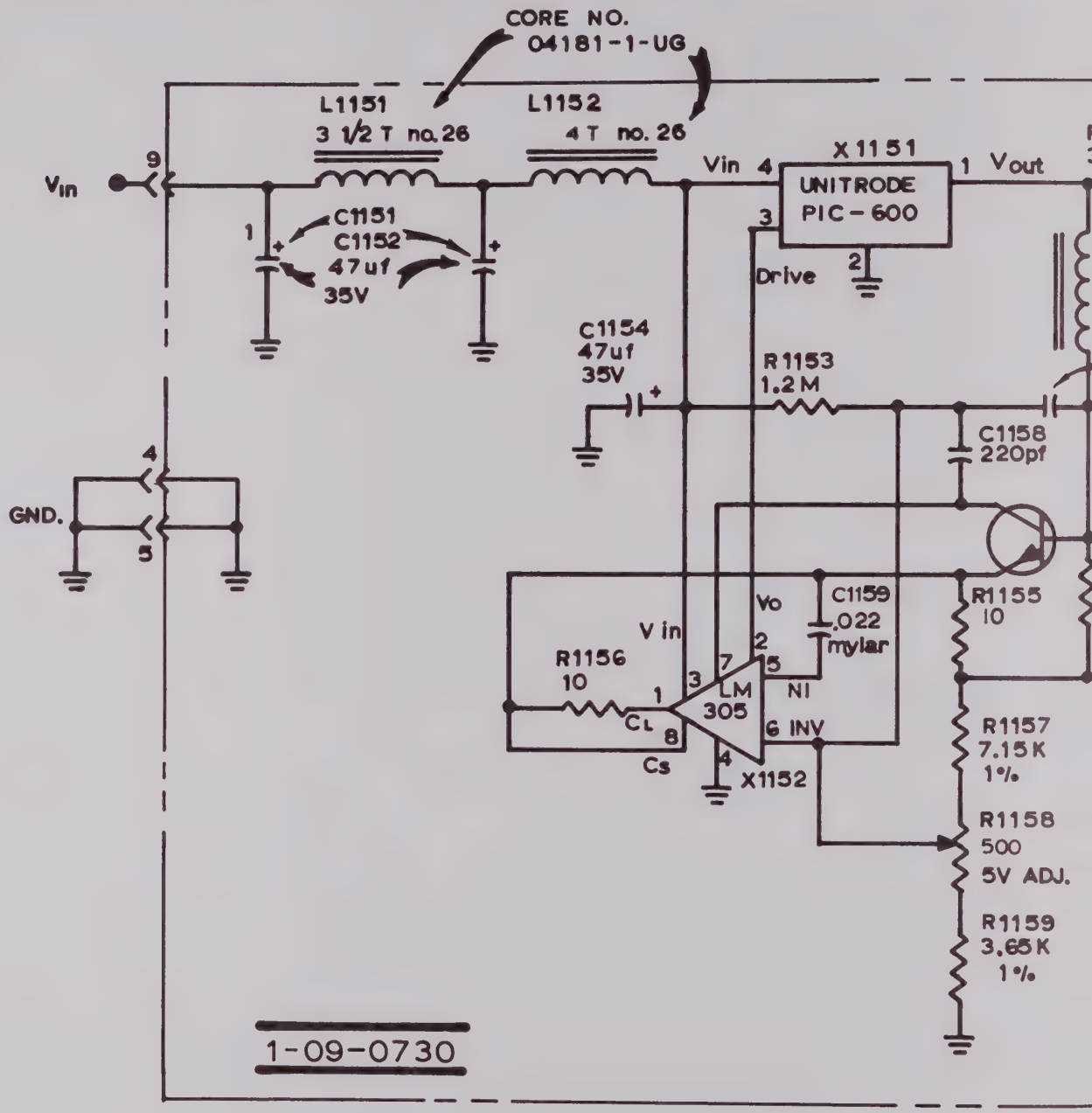

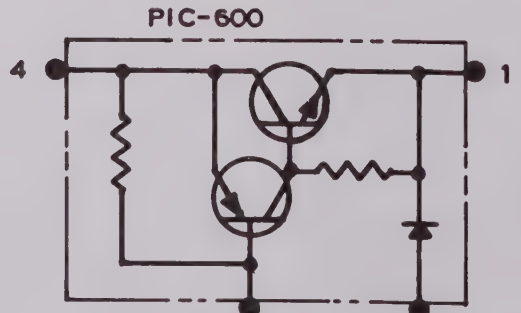

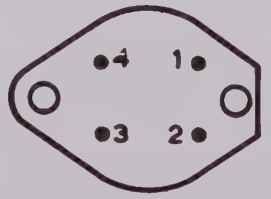

BOTTOM VIEW

NOTE :

1. RES. ARE IN
2. LAST No.S USE
3. EFFECTIVE S/
4. PRIOR TO S/ 137 (NAV 402 A
5. PRIOR TO S/ 158 (NAV 402 A

DATE	REV	CHANGE	APP'D
5-19 76	A	INCORP. ECN#1471 WW	MO
6-2-76	B	INCORP. ECN#1479 RKK	MO
7 29 76	C	INC ECN 1573 MO RKK	MO
6-7-77	D	INCORP ECN # 1803 WW	MO
7-12 77	E	INCORP. ECN # 2069 AA	MO
9-26 78	F	INC. ECN 3095 JAC.	

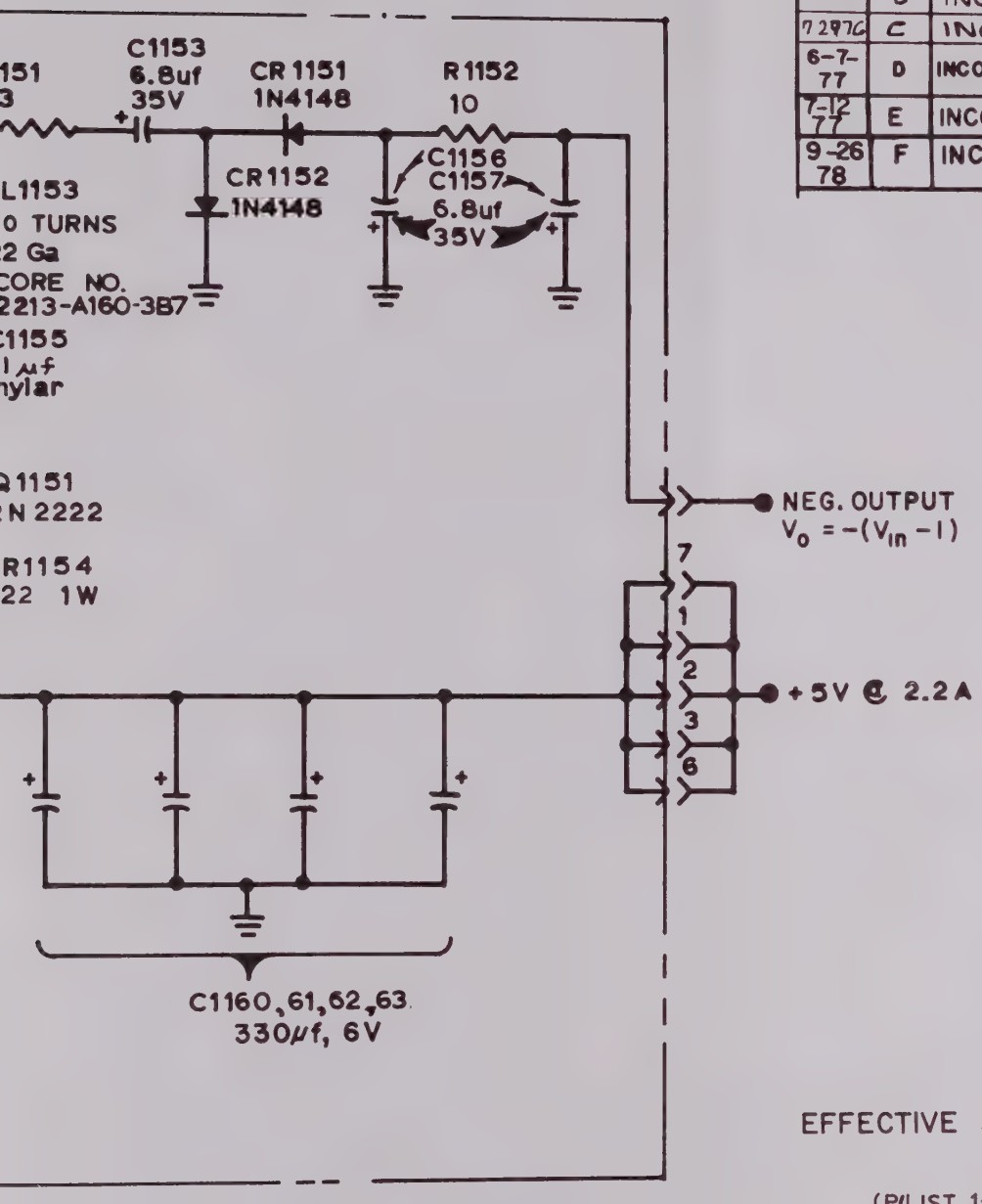

EFFECTIVE S/N 621 & ON

(P/LIST 1-09-0731)

Ω

: L1153, X1152, Q1151, C1163, & R1159.

1: 621 (ATC 600)
1636 (NAV 401L)
132 (NAV 402AP)
; 781 (ATC 600), 1819 (NAV 401L),
); L1153 WAS 40 TURN.
; 865 (ATC 600), 1930 (NAV 401L),
), R1155 WAS 15Ω.

INSTRUMENT FLIGHT RESEARCH CORP. 4053 Navajo Lane Wichita, Ks.	DWN DATE 11-11-75	
	CHKD DATE	
5V REGULATOR SCHEMATIC (ASS'Y 4)	APP DATE	
PART NO 2-09-0729	REV F DATE 9-26-78	DWN WW APP
SCALE	MODEL NAV 402AP ATC 600/NAV 401L	SHT. 1 of 1

Fig. 8-30

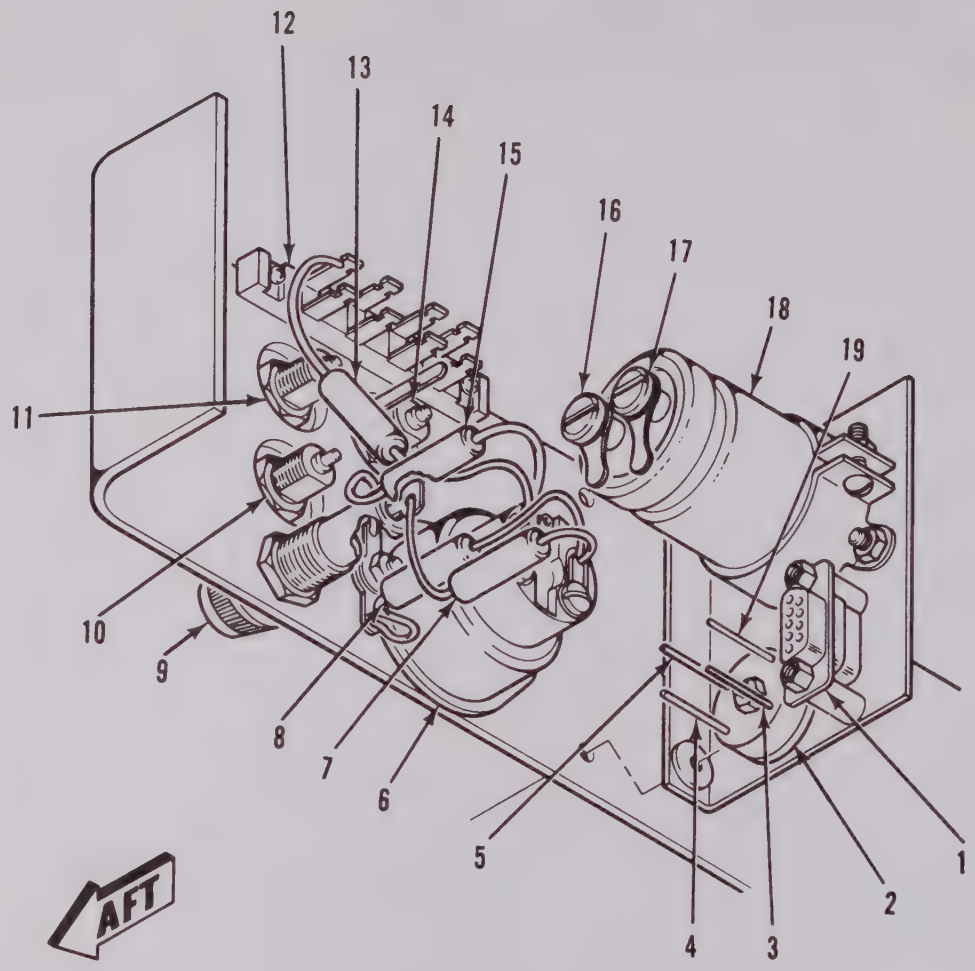

1. J1101	8. C1110	14. J1102
2. CR1101	9. F1101	15. C1102
3. Positive Term. +20 V	10. J1103	16. Negative Term.-Gnd.
4. AC Input Term.	11. J1104	17. Positive Term.-+20 V
5. Negative Term.-Gnd.	12. TB1101	18. C1103
6. P1105	13. L1102	19. AC Input Term.
7. L1101		

Fig. 8-31 AC POWER SUPPLY PARTS LAYOUT

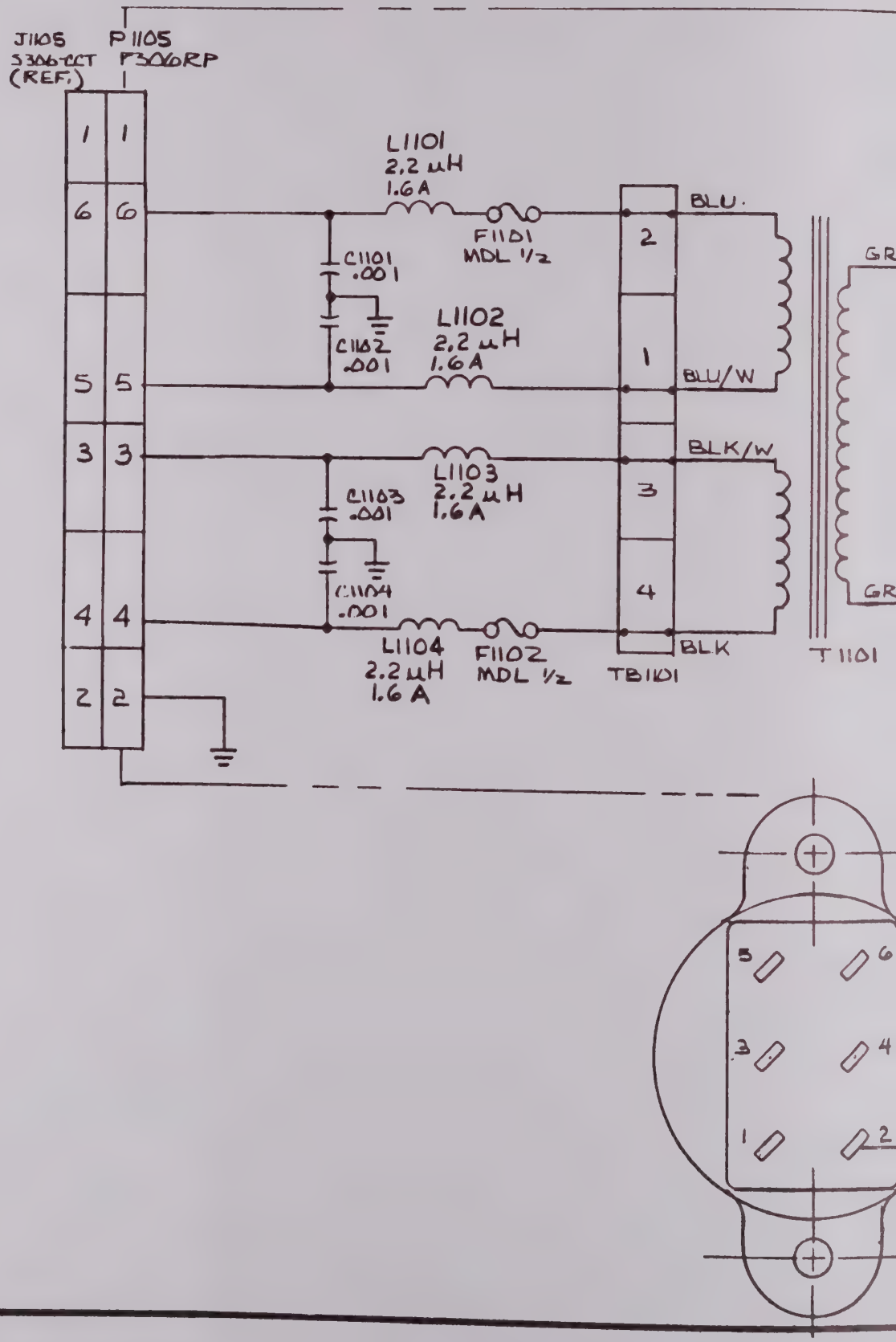
J1105
5306-CCT
(REF.)
P1105
P306RP
1
1
6
6
5
5
3
3
4
4
2
2
L1101
2.2 µH
1.6A
F1101
MDL 1/2
C1101
.001
C1102
.001
L1102
2.2 µH
1.6A
L1103
2.2 µH
1.6A
C1103
.001
C1104
.001
L1104
2.2 µH
1.6A
F1102
MDL 1/2
TB1101
2
1
3
4
BLU.
BLU/W
BLK/W
BLK
GR
GR
T1101
5
6
3
4
1
2

DATE	REV	CHANGE	APP'D
5-5-77	A	INC. ECN #2007 TT	
8/2/77	B	INCORP. ECN # 2210 LC	
2-80	C	INC ECN JAT	
3-6-88	D	INC ECN #3439 RLD	

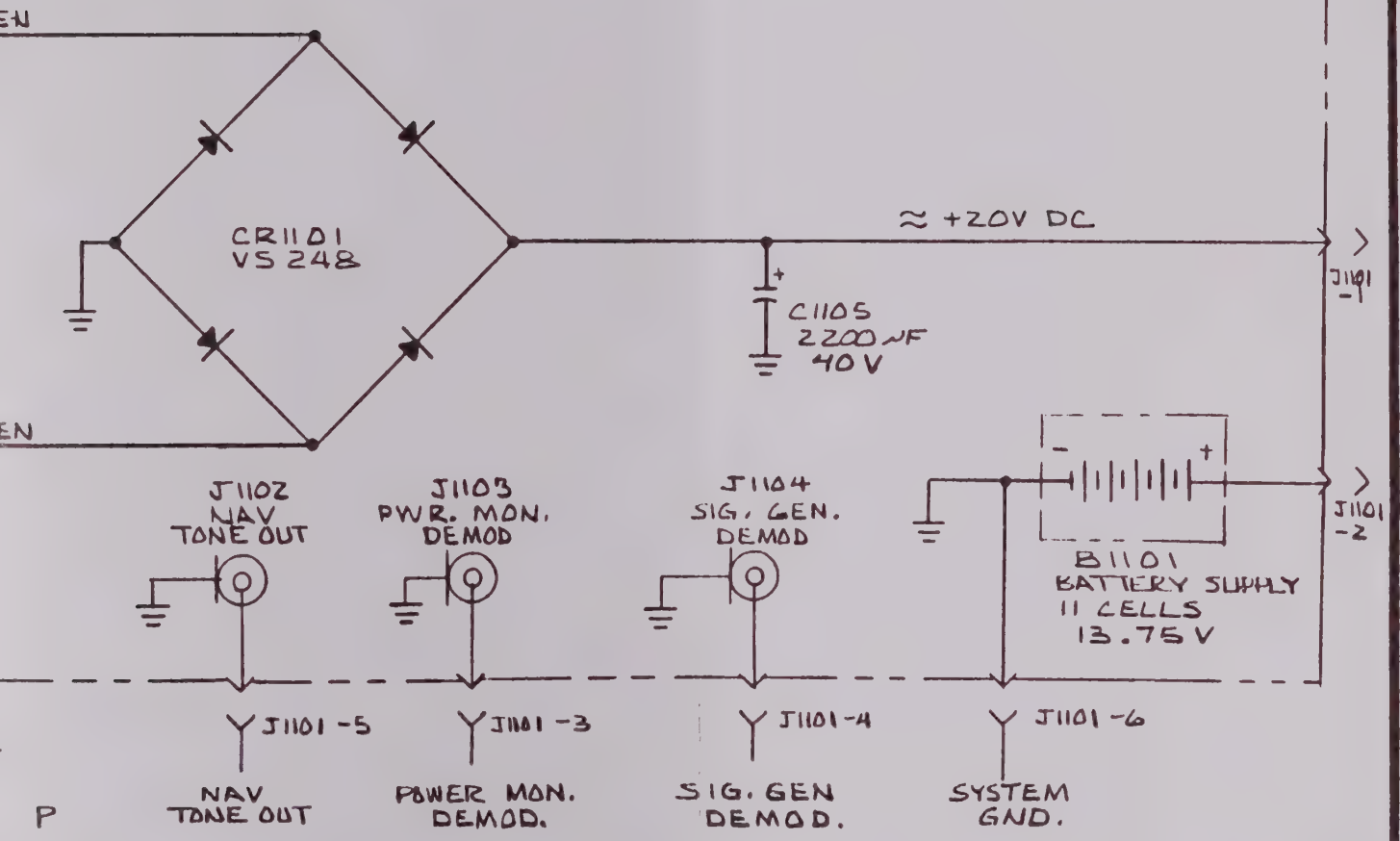

		NAV402AP	1	1	09-0676	SCHEMATIC
NEXT ASS'Y	QT'Y	MODEL	ITEM	REQ'D	PART NO.	DESCRIPTION
APPLICATION			LIST OF MATERIALS			

TOLERANCES
UNLESS OTHERWISE SPECIFIED
ALL DIMENSIONS APPLY AFTER FINISH
DECIMALS: ± .005
ANGLES: ± 1/2°
FRACTIONS: ± 1/64
SURFACE ROUGHNESS 125
REMOVE ALL BURRS

DRAWN DATE 9-5-74
CHECKED DATE 10 7 74
APPROVED DATE

INSTRUMENT FLIGHT RESEARCH CORPORATION
WICHITA, KANSAS

TITLE
AC POWER SUPPLY
NAV 402AP

MATERIAL
TREATMENT
FINISH

SIZE	PART NUMBER	REV
B	0000-0967-600	D
SCALE NONE	WEIGHT	SHEET 1 OF 1

22 GA
BLACK WIRE

Fig. 8-32AP

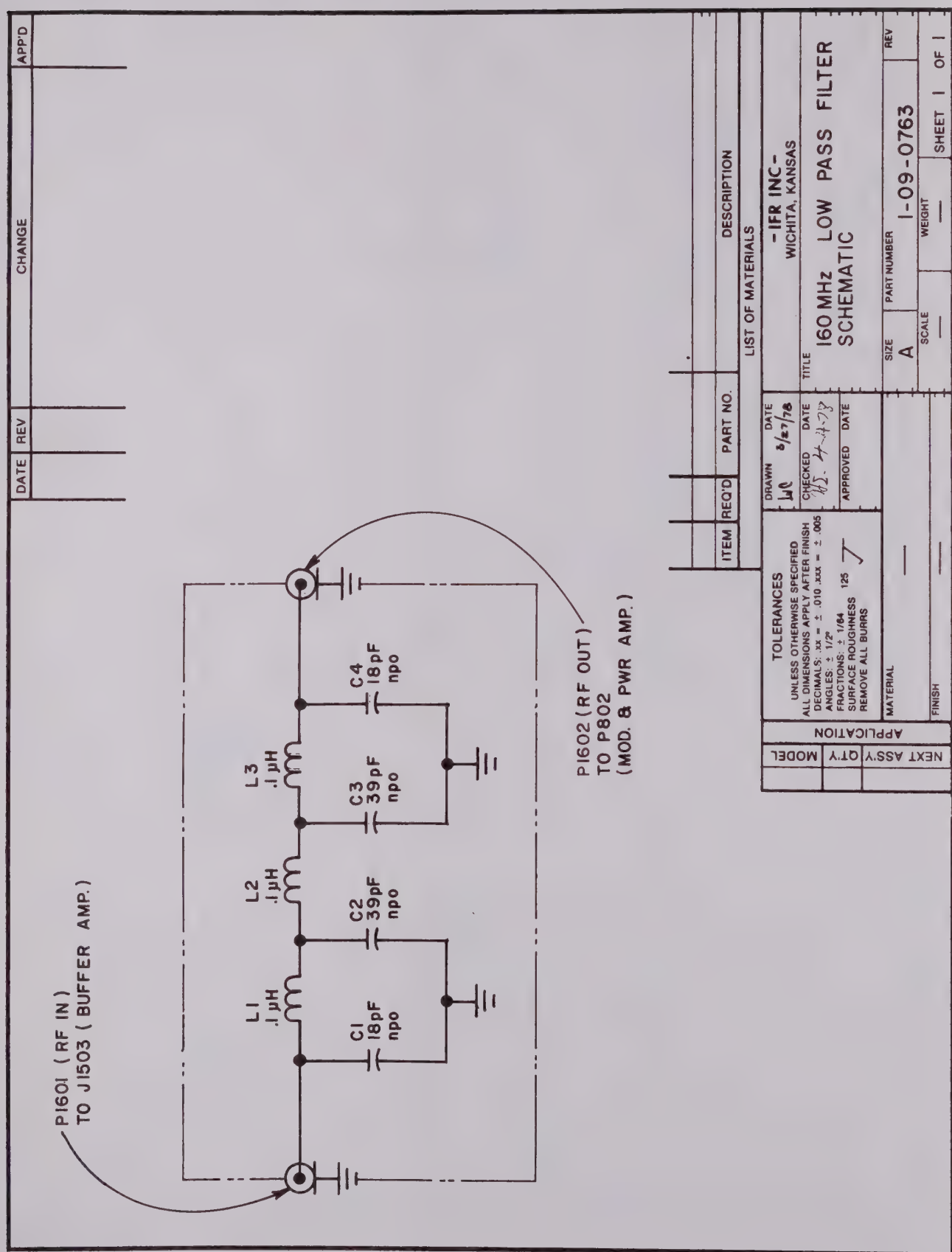

DATE
REV
CHANGE
APP'D
P1601 (RF IN)
TO J1503 (BUFFER AMP.)
L1
.1 µH
C1
18pF
npo
L2
.1 µH
C2
39pF
npo
L3
.1 µH
C3
39pF
npo
C4
18pF
npo
P1602 (RF OUT)
TO P802
(MOD. & PWR AMP.)
ITEM
REQ'D
PART NO.
DESCRIPTION
LIST OF MATERIALS
TOLERANCES
UNLESS OTHERWISE SPECIFIED
ALL DIMENSIONS APPLY AFTER FINISH
DECIMALS: .xx = ± .010 .xxx = ± .005
ANGLES: ± 1/2°
FRACTIONS: ± 1/64
SURFACE ROUGHNESS 125
REMOVE ALL BURRS
DRAWN
DATE
3/27/78
CHECKED
DATE
APPROVED
DATE
MATERIAL
FINISH
APPLICATION
NEXT ASS'Y
QT'Y
MODEL
-IFR INC-
WICHITA, KANSAS
TITLE
160 MHz LOW PASS FILTER
SCHEMATIC
SIZE
A
PART NUMBER
1-09-0763
REV
SCALE
WEIGHT
SHEET 1 OF 1

Fig. 8-33

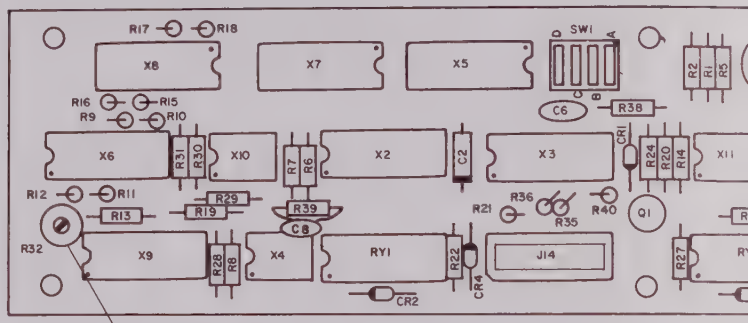

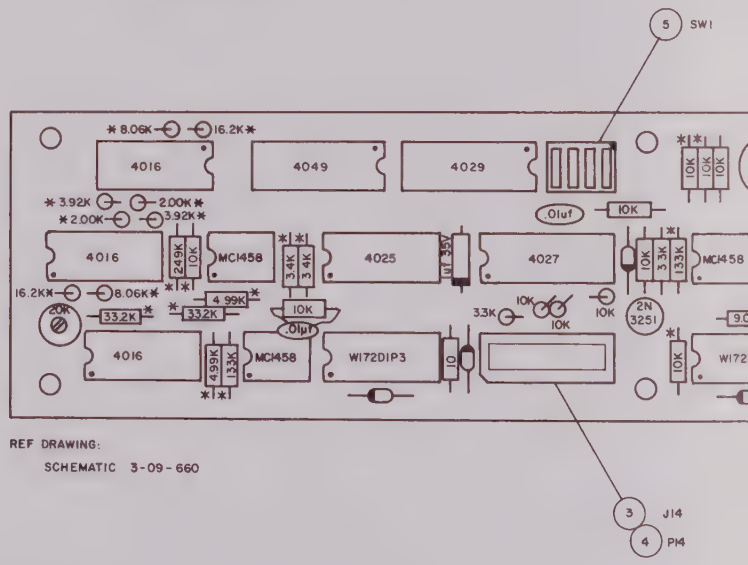

REF DRAWING:

SCHEMATIC 3-09-660

NOTES

7. "*" INDICATES 1/4W ,1% RESISTOR
6. ALL DIODES ARE IN4148
5. CHIP CAPACITORS ARE ON BACK OF BOARD UNLESS NOTED.
4. MAXIMUM HEIGHT OF COMPONENTS TO BE .35 FROM COMPONENT SIDE OF BOARD.
3. COMPONENT LEADS MAY EXTEND .04 TO .06 BEYOND BOTTOM OF BOARD AFTER SOLDERING.
2. ALL CAPACITORS ARE IN µf EXCEPT AS NOTED.
1. ALL RESISTORS ARE 1/4W, 10% TOL. EXCEPT AS NOTED.

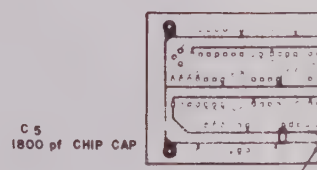

C 5
1800 pf CHIP CAP

26 GA BUSS WIRE
SLEEVED

BOTTOM

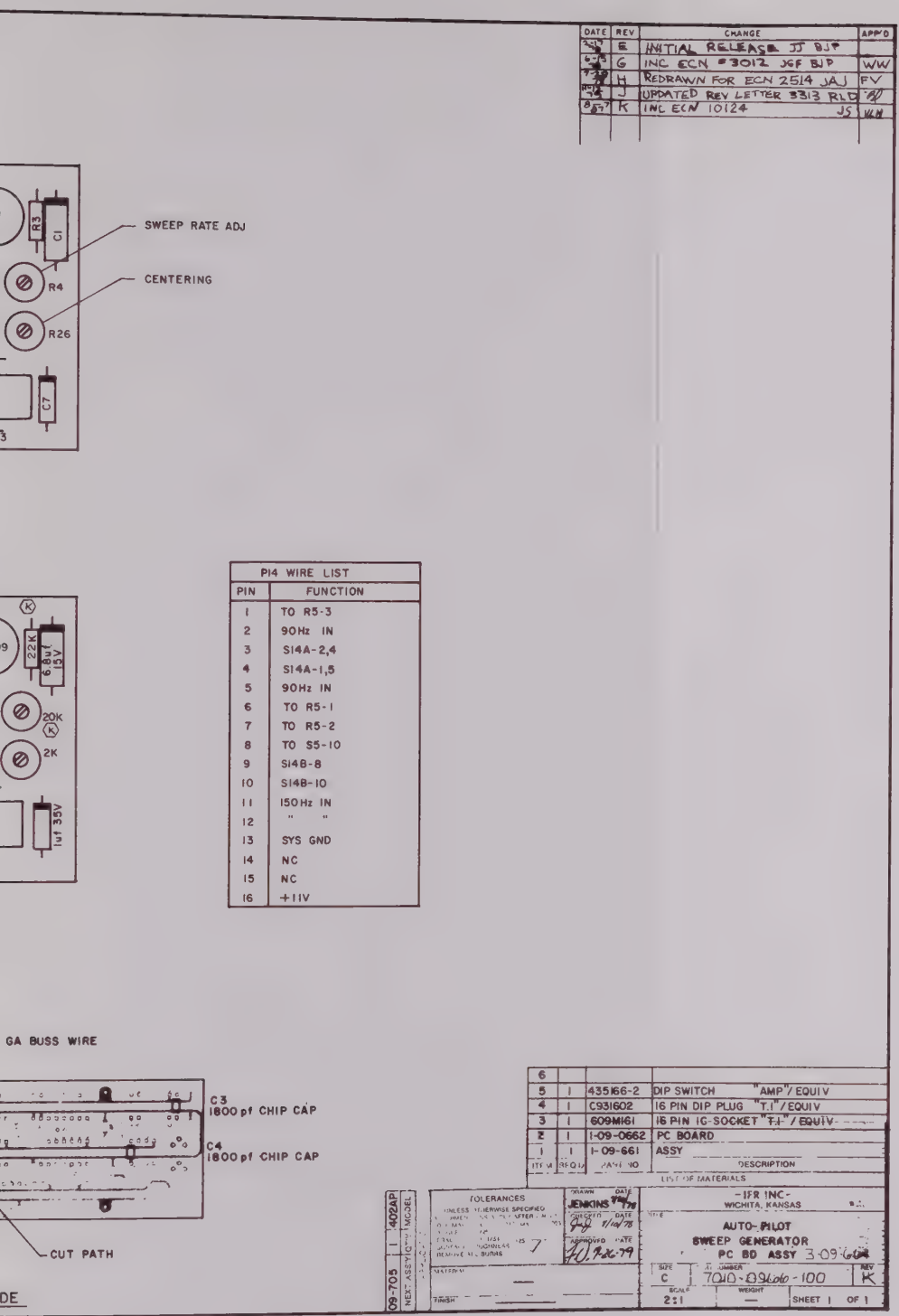

P14 WIRE LIST	
PIN	FUNCTION
1	TO R5-3
2	90Hz IN
3	S14A-2,4
4	S14A-1,5
5	90Hz IN
6	TO R5-1
7	TO R5-2
8	TO S5-10
9	S14B-8
10	S14B-10
11	150Hz IN
12	" "
13	SYS GND
14	NC
15	NC
16	+11V

Fig. 8-35

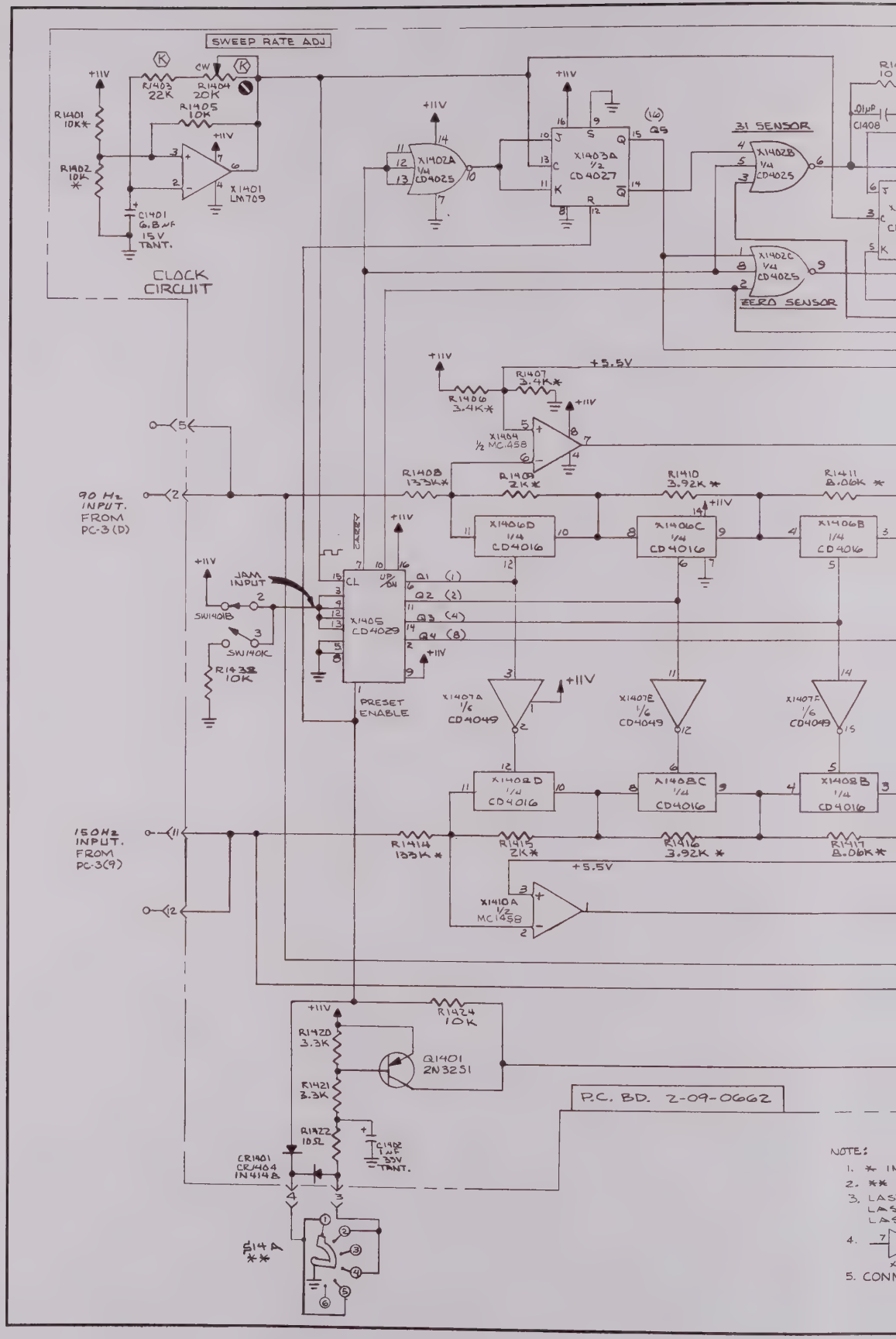
SWEEP RATE ADJ
CLOCK CIRCUIT
31 SENSOR
ZERO SENSOR
90 Hz INPUT. FROM PC-3 (D)
150 Hz INPUT. FROM PC-3 (9)
JAM INPUT
PRESET ENABLE
X1401 LM709
X1402A 1/4 CD4025
X1403A 1/2 CD4027
X1402B 1/4 CD4025
X1402C 1/4 CD4025
X1404 1/2 MC1458
X1405 CD4029
X1406D 1/4 CD4016
X1406C 1/4 CD4016
X1406B 1/4 CD4016
X1407A 1/6 CD4049
X1407E 1/6 CD4049
X1407F 1/6 CD4049
X1408D 1/4 CD4016
X1408C 1/4 CD4016
X1408B 1/4 CD4016
X1410A 1/2 MC1458
Q1401 2N3251
P.C. BD. 2-09-0662
NOTE:

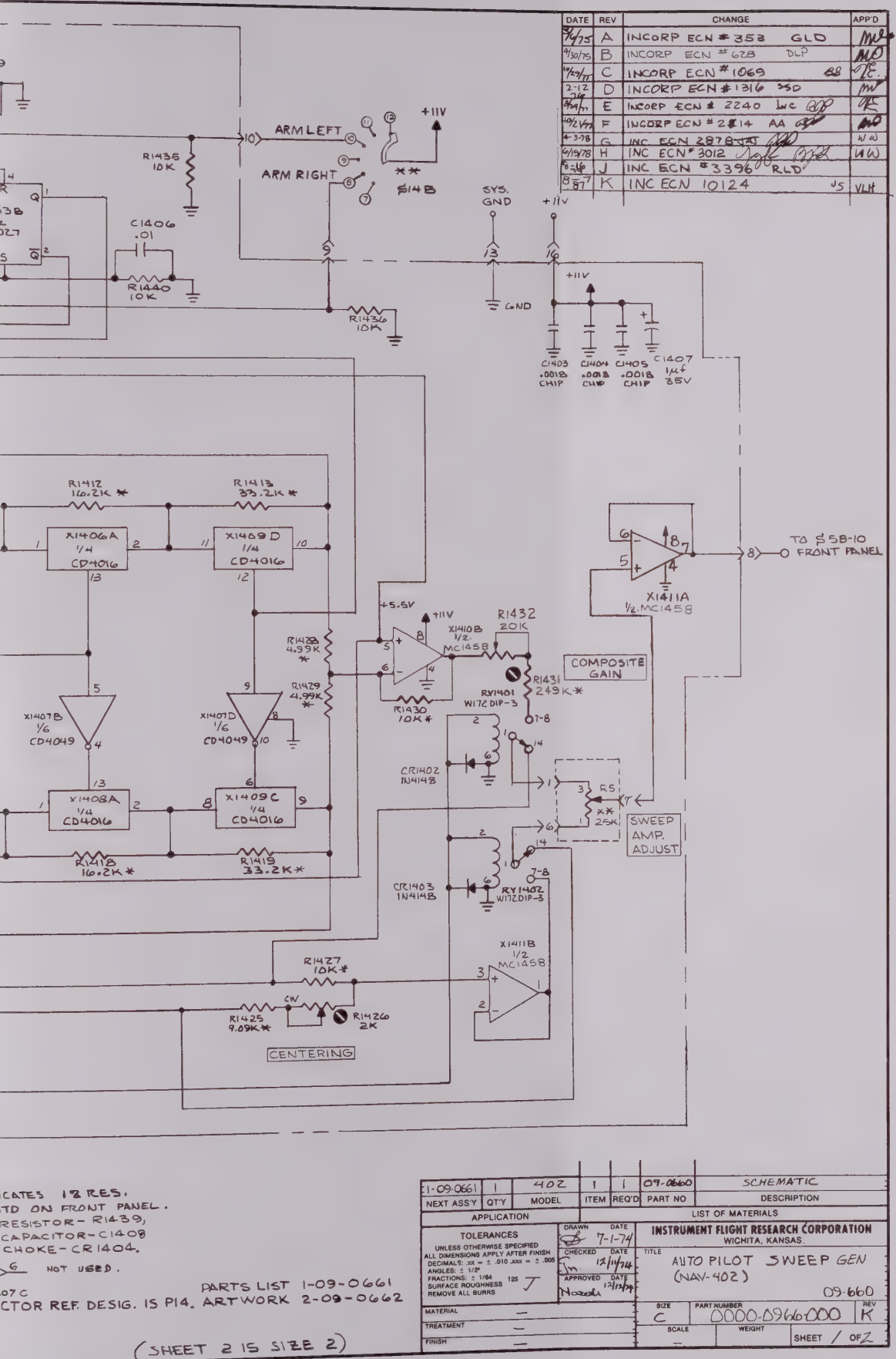

DATE | REV | CHANGE | APP'D
3/6/75 A INCORP ECN # 353 GLD
4/30/75 B INCORP ECN # 628 DLP
10/29/75 C INCORP ECN # 1069
2-12-76 D INCORP ECN # 1316 SSD
8/24/77 E INCORP ECN # 2240 LWC
10/21/77 F INCORP ECN # 2814 AA
4-3-78 G INC ECN 2878 WW
6/15/78 H INC ECN # 3012 WW
8-16-87 J INC ECN # 3396 RLD
8-7-87 K INC ECN 10124 JS VLH
ARM LEFT
ARM RIGHT
+11V
S14B
R1435 10K
C1406 .01
R1440 10K
R1436 10K
SYS. GND
GND
C1403 .0018 CHIP
C1404 .0018 CHIP
C1405 .0018 CHIP
C1407 1µf 35V
R1412 16.2K *
R1413 33.2K *
X1406A 1/4 CD4016
X1409D 1/4 CD4016
X1407B 1/6 CD4049
X1407D 1/6 CD4049
X1408A 1/4 CD4016
X1409C 1/4 CD4016
R1418 16.2K *
R1419 33.2K *
R1428 4.99K *
R1429 4.99K *
+5.5V
X1410B 1/2 MC1458
R1432 20K
R1431 249K *
R1430 10K *
RY1401 W172DIP-3
COMPOSITE GAIN
CR1402 1N4148
CR1403 1N4148
RY1402 W172DIP-3
R5 25K
SWEEP AMP. ADJUST
X1411A 1/2 MC1458
TO S5B-10 FRONT PANEL
X1411B 1/2 MC1458
R1427 10K *
R1425 9.09K *
R1426 2K
CW
CENTERING
CATES 18 RES.
TD ON FRONT PANEL.
RESISTOR - R1439,
CAPACITOR - C1408
CHOKE - CR1404.
6 NOT USED.
07C
CTOR REF. DESIG. IS P14.
PARTS LIST 1-09-0661
ARTWORK 2-09-0662
(SHEET 2 IS SIZE 2)
1-09-0661 | 1 | 402 | 1 | 1 | 09-0660 | SCHEMATIC
NEXT ASS'Y | QT'Y | MODEL | ITEM | REQ'D | PART NO | DESCRIPTION
APPLICATION
LIST OF MATERIALS
TOLERANCES
UNLESS OTHERWISE SPECIFIED
ALL DIMENSIONS APPLY AFTER FINISH
DECIMALS: .xx = ± .010 .xxx = ± .005
ANGLES: ± 1/2°
FRACTIONS: ± 1/64
SURFACE ROUGHNESS 125
REMOVE ALL BURRS
DRAWN DATE 7-1-74
CHECKED DATE 12/11/74
APPROVED DATE 12/12/74
INSTRUMENT FLIGHT RESEARCH CORPORATION
WICHITA, KANSAS.
TITLE AUTO PILOT SWEEP GEN (NAV-402)
09-660
MATERIAL
TREATMENT
FINISH
SIZE C
PART NUMBER 0000-0966-000
REV K
SCALE
WEIGHT
SHEET 1 OF 2

Fig. 8-36

PARTS LIST

NAV-401L/402AP SECTION 9

9-1 Introduction.

9-2 The parts list included in this section is a listing primarily of active components and those components which may require replacement. Other mechanical parts are listed on the mechanical assembly drawings of Section 8 and Section 10. Unless otherwise indicated the parts listed herein are used in all NAV-401L test sets S/N 1639 and on. Effectivities for each assembly or group of components are indicated at the beginning of each listing, where necessary.

9-3AP Front Panel Assy.

Dwg/Ref Symbol	Part No.	IFR Stock No.	Description	Qty. Per Assy.
3-09-688		1-09-688	Front Panel Assy.	REF
S2		1-76-009	· Bearing Switch Assy.	1
	177606MV		· · Switch, EECO/ Equiv.	4
M1	112HL	2-76-004	· Power Meter, INTER-NATIONAL INSTRUMENTS /Equiv.	1
S3	CK1701		· Switch, C & K/Equiv.	1
S1	CK7207J1R		· Switch, C & K/Equiv.	1
L1 & 2	BEP		· Lamp Base, SHELLEY/ Equiv.	2
L1 & 2	RBP		· · Lens, SHELLEY/ Equiv.	2
L1 & 2	229		· · Lamp, GE/Equiv.	2
S11	46-101R		· Switch, GRAYHILL/ Equiv.	1
R5 & 7	RV6NAYSD-253A	1-76-003	· 25K Pot, CLAROSTAT/ Equiv.	2
R4, 6 & 8	RVGLAYSA-252A		· 2.5K Pot, CLAROSTAT/ Equiv.	3
R9 & 10	850-10T		· Dual 10K Pot, ELEC-TRO TECH/Equiv.	1
R2 & R3	39032	1-76-018	· Dual 100K Pot, CLAROSTAT/Equiv.	1
R1	39033	1-76-017	· 50K Pot, mod, CLAROSTAT/Equiv.	1
J1 & 2	UG-1094/U		· Connector, AMPHENOL/ Equiv.	2

9-3AP Front Panel Assy. (cont.)

Dwg/Ref Symbol	Part No.	IFR Stock No.	Description	Qty. Per Assy.
S10	CK7201		· Switch, C & K/ Equiv.	1
S5 & 8	71BD36-02-1-AJN		· Switch, 10 Position, GRAYHILL/Equiv.	2
S701	PS107	1-76-006	· Switch, Modified, CENTRALAB/Equiv.	1
S6	51CD30-01-1-AJN		· Switch, 12 Position, GRAYHILL/Equiv.	1
S7 & S14	51CD30-01-2-AJN		· Switch, 6 Position, GRAYHILL/Equiv.	2
S9	39-1		· Momentary Switch, GRAYHILL/Equiv.	1
		1-00-56-1	· Bar Knob for Monitor Meter Function, Frequency Mode, and Tone Select Switches.	3
		1-00-56-2	· Bar Knob for Localizer DDM, Glide Slope DDM, and Counter Mode Switches.	3
		1-00-57-1	· Round Knob for Localizer Variable DDM and Glide Slope Variable DDM Controls.	2
		1-09-400	· Inner Round Knob for Variable 30Hz Control.	1
		1-09-401	· Outer Round Knob for Variable 9960Hz Control.	1
		1-09-219	· Outer Round Knob for Variable Frequency Control.	1
		1-09-220	· Inner Round Knob for Variable Frequency Control.	1

9-3AP Front Panel Assy. (cont.)

Dwg/Ref Symbol	Part No.	IFR Stock No.	Description	Qty. Per Assy.
		1-00-133	· Bar Knob for Sweep Control.	1
		1-09-659	· Round Knob for XTAL HI/LO Switch.	1
		1-09-689	· Counter Assembly	1
		1-09-379	· Dual Knob Assembly	1
		1-09-386	· Dial Assy., Attenuator.	1
		1-09-559	· Bezel (Interchangeable with P/N 1-09-551)	1
		1-09-265	· Lens (Interchangeable with P/N 1-09-551)	1
		1-00-097	· Round Knob for Attenuator.	1

9-4AP Digital Counter Assy.

Dwg/Ref Symbol	Part No.	IFR Stock No.	Description	Qty. Per Assy.
		1-09-689	Digital Counter Assy.	REF
		1-09-723	· Counter Board Assy.	1
		1-09-757	· Display Board Assy.	1
S12		1-09-753	· · Modified Switch, GRAYHILL/Equiv.	1
S601	39137-1212SM-3-PB		· · Switch, 6 pole, 6 position, GR1GSBY/ Equiv.	1
		1-09-271	· HV Power Supply Assy.	1

9-5AP Counter Board Assy.

Dwg/Ref Symbol	Part No.	IFR Stock No.	Description	Qty. Per Assy.
3-09-723		1-09-723	Counter Board Assy.	
X603-8	DD-700		· Logic, BECKMAN/Equiv. (Interchangeable with NATIONAL DM8880)	6
X609-14	7475		· Logic, TI/Equiv.	6
X601 & 24	7400		· Logic, TI/Equiv.	2
X602,21 & 25	7473		· Logic, TI/Equiv.	3
X615-20, 22, 23,26,27, & 28	7490		· Logic, TI/Equiv.	11
CR602	1N270		· Diode, SOLID STATE/ Equiv.	1
CR601,3 & 4	1N4148		· Diode, SOLID STATE/ Equiv.	3
Q607	2N3646		· Transistor, NATIONAL/ Equiv.	1
	2N3903 (EFF: S/N 134 & on)		· Transistor, NATIONAL/ Equiv.	
Q604-6	2N3646		· Transistor, NATIONAL/ Equiv.	3
Q601-3	2N2222		· Transistor, MOTOROLA/ Equiv.	3
P601	205735-1		· Plug, Connector, 15 Pin	1

9-7AP Power Supply Assy.

Dwg/Ref Symbol	Part No.	IFR Stock No.	Description	Qty. Per Assy.
3-09-678		1-09-678	Power Supply Assy.	REF
2-09-676			Power Supply Schematic	REF
T1101	NT859	1-00-077	· Transformer, NATIONAL/ Equiv.	1
	HKP		· Fuse Holder, BUSSMAN/ Equiv.	1
	357001		· Fuse Block, Single, LITTLEFUSE/Equiv.	1
F1101 & 2	MDL ½		· Fuse, ½A Slow Blow, BUSS/Equiv.	2
J1102-4			· Connector, AMPHENOL/ Equiv.	3
J1105	UG-1094/U		· Connector, AMPHENOL/ Equiv.	1
CR1101	PK-10		· Bridge Rectifier, ELECTRONIC DEVICES/ Equiv. (Interchange-able with VARO VH248)	1
C1105	CGS222U0-40BB10		· Capacitor, 2200µf, 40V, MALLORY/Equiv.	1
P1101	P306RP		. A.C. Plug, CINCH/ Equiv.	1
B1101		1-00-122	· Battery Pack Assy.	1

9-8 P.C. Card Cage Assy.

Dwg/Ref Symbol	Part No.	IFR Stock No.	Description	Qty Per Assy.
3-09-591		1-09-591	P.C. Card Cage Assy.	REF
	STSM-2C4		• Standoff, SEALECTRO/ Equiv.	7
	50-30A-30		• Connector, CINCH/Equiv.	5
	23071-5		• Card Guide, Natural; SCANBE/Equiv.	2
		1-76-031	• Card Guide, Scarlet; SCANBE/Equiv.	2
		1-76-032	• Card Guide, Green, SCANBE/Equiv.	2
		1-76-033	• Card Guide, Blue; SCANBE/Equiv.	2
		1-76-034	• Card Guide, Black; SCANBE/Equiv.	2
Q224 & 225	SJE-1462		• Transistor, MOTOROLA/ Equiv. (Interchange-able with 2N5195)	2

9-9 Bearing Check Board Assy.

Dwg/Ref Symbol	Part No.	IFR Stock No	Description	Qty Per Assy
3-09-696		1-09-696	Bearing Check Board Assy	REF
3-09-713			Bearing Check Board Schematic	REF
Q4 & 8	2N2222		• Transistor, MOTOROLA/ Equiv. (Interchange-able with 2N3415)	2
Q5 & 6	66382		• Transistor, RCA/Equiv. (Interchangeable with 2N5179)	2
Q2	2N5366		• Transistor, SOLID STATE/Equiv.	1
Q1, 3 & 7	2N3251A		• Transistor, NATIONAL/ Equiv. (Interchange-able with 2N5366)	3
X4	MC1709CG		• Op Amp, MOTOROLA/Equiv. (Interchangeable with LM709H)	1
X10 & 11	7490		• Logic, TI/Equiv.	2
X1-3, 5-9	72558/ SN1458		• Op Amp, TI or SIG-NETICS Only	8
	8008-1G3		• Crystal Holder, AUGAT/ Equiv.	1
Y1		3-76-0063-18	• • 10.0 MHz Antires-onant Crystal, AUGAT/ Equiv.	1
CR1-10	1N4148		• Diode, SOLID STATE/ Equiv.	10
C23	538011A		• 5.5-18pf Trimmer Cap-acitor, ERIE/Equiv.	1
R18	62-1-1-202		• 2K Trimpot, SPECTROL/ Equiv.	1

9-9 Bearing Check Board Assy. (cont.)

Dwg/Ref Symbol	Part No.	IFR Stock No.	Description	Qty Per Assy
R28	62-1-1-501		• 500 Ω Trimpot, SPECTROL/Equiv.	1
R50 & 52	62-1-1-203		• 20 K Trimpot, SPECTROL/Equiv.	2
R60	62-1-1-103		• 10 K Trimpot, SPECTROL/Equiv.	1
R63	62-1-1-502		• 5 K Trimpot, SPECTROL/Equiv.	1
TP1-7	SKT-103-PC-O		• Test Point, TI/Equiv.	7

9-10 Regulator/Timer Board Assy.

Dwg/Ref Symbol	Part No.	IFR Stock No.	Description	Qty Per Assy
3-09-575		1-09-575	Regulator/Timer PC Board Assy.	REF
3-09-422			Regulator/Timer Board Schematic	REF
X2	72741L		• Op Amp, TI/Equiv.	1
X1	LM709H		• Op Amp, NATIONAL/ Equiv.	1
Q13	2N2405		• Transistor, SOLID STATE/Equiv.	1
Q1, 3, 4, 5, 7, 10, 12, 15, 17, & 20	2N2222		• Transistor, SOLID STATE/Equiv. (Eff: S/N 1799 & on) (Interchangeable with 2N3415)	10
	2N3415		• Transistor, (Eff: to S/N 1799) (Interchangeable with 2N2222)	
Q1, 6, 8, 9, 11, 14, 16, 18 & 19	2N3251A		• Transistor, NATIONAL/ Equiv. (Interchangeable with 2N5366)	9
CR7, 8 & 19	1N4002		• Diode, TI/Equiv.	3
CR1, 2, 5, 6, 10-18, 20-27, 30-33	1N4148		• Diode, SOLID STATE/ Equiv.	25
CR4	1N5240		• Diode, MOTOROLA/Equiv.	1
CR3 & 9	1N5234		• Diode, MOTOROLA/Equiv.	2

9-10 Regulator/Timer Board Assy. (cont.)

Dwg/Ref Symbol	Part No.	IFR Stock No.	Description	Qty Per Assy
K1			• DPDT Relay, ELECTRONIC SPECIALTIES/Equiv.	1
R10	62-2-1-501		• 500 Ω Trimpot, SPECTROL/Equiv.	1
R66	62-2-1-102		• 1 K Trimpot, SPECTROL/Equiv.	1
R53, 60 & 64	62-2-1-202		• 2 K Trimpot, SPECTROL/Equiv.	3
R20	62-2-1-502		• 5 K Trimpot, SPECTROL/Equiv.	1
R62	62-2-1-103		• 10 K Trimpot, SPECTROL/Equiv.	1
R72	62-2-1-203		• 20 K Trimpot, SPECTROL/Equiv.	1
TP1	SKT103PC-0		• Test Point, TI/Equiv.	1

9-11 Combination Sine Board Assy.

Dwg/Ref Symbol	Part No.	IFR Stock No	Description	Qty Ref Assy
3-09-580		1-09-580	Combination Sine Board Assy	REF
3-09-430			Combination Sine Board Schematic	REF
CR1-10, 13-26, 29-33	1N4148		• Diode, SOLID STATE/ Equiv.	29
X1-3, 5-10	72741L		• Op Amp, TI/Equiv.	9
X4	LM709H		• Op Amp, NATIONAL/ Equiv.	1
Q5-9	2N2222		• Transistor, MOTOROLA/ Equiv. (Interchange-able with 2N3415)	5
Q3 & 4	2N3251A		• Transistor, NATIONAL/ Equiv. (Interchange-able with 2N5366)	2
Q1 &2	2N4223		• Transistor, NATIONAL/ Equiv.	2
R12, 46 & 89	62-2-1-102		• 1 K Trimpot, SPECTROL/ Equiv.	3
R91 & 86	62-2-1-202		• 2 K Trimpot, SPECTROL/ Equiv.	2
R6 & 44	62-2-1-502		• 5 K Trimpot, SPECTROL/ Equiv.	2
R93	62-2-1-103		• 10 K Trimpot, SPEC-TROL/Equiv.	1
TP1 & 2	SKT-103-PC-0		• Test Point, TI/Equiv.	2

9-12 30 Hz Sine Board Assy.

Dwg/Ref Symbol	Part No.	IFR Stock No	Description	Qty. Per Assy.
3-09-708		1-09-708	30 Hz Sine Board Assy	REF
3-09-722			30 Hz Sine Board Schematic	REF
X1 & 8	72741L		• Op Amp, TI/Equiv.	2
X7	LM709H		• Op Amp, NATIONAL/ Equiv.	1
X3	CD4040AE		• Logic, RCA/Equiv.	1
X4	CD4011AE		• Logic, RCA/Equiv.	1
X2, 5, 6 & 9	72558/ MC4158		• Op Amp, TI or SIGNETICS Only	4
Q1, 3, 8, 10, 11 & 13	2N2222		• Transistor, MOTOROLA/ Equiv. (Eff: S/N 1959 and on)	6
	2N3415		• Transistor, SOLID STATE/Equiv. (Eff: to S/N 1959)	
Q2, 6, 7, 9 & 12	2N3251A		• Transistor, SOLID STATE/Equiv. (Eff: S/N 1959 and on)	5
	2N5366		• Transistor, SOLID STATE/Equiv. (Eff: to S/N 1959)	
Q4 & 5	2N4223		• Transistor, NATIONAL/ Equiv. (Eff: S/N 1959 and on)	2
	UC714		• Transistor, UNION CARBIDE/Equiv. (Eff: to S/N 1959)	

9-12 30 Hz Sine Board Assy. (cont.)

Dwg/Ref Symbol	Part No.	IFR Stock No.	Description	Qty. Per Assy.
CR1-14, 17-33, 36-49, 52-58	1N4148		• Diode, SOLID STATE/ Equiv.	52
R9 & 92	62-1-1-501		• 500 Ω Trimpot, SPECTROL/Equiv.	2
R37	62-1-1-202		• 2 K Trimpot, SPECTROL/ Equiv.	1
R33 & 51	62-1-1-502		• 5 K Trimpot, SPECTROL/ Equiv.	2
R1, 6, 33, 35, 53, 54, 60, 61, 82 & 89	62-1-1-103		• 10 K Trimpot, SPECTROL/Equiv.	10
R16	62-1-1-203		• 20 K Trimpot, SPECTROL/Equiv.	1
TP1-3	SKT103PC-0		• Test Point, TI/Equiv.	3

9-13 VOR Bearing Logic Board Assy.

Dwg/Ref Symbol	Part No.	IFR Stock No	Description	Qty. Per Assy
1-09-581		1-09-581	VOR Bearing Logic Board Assy.	REF
3-09-427			VOR Bearing Logic Board Schematic	REF
X1, 5 & 10	7400		• Logic, TI/Equiv.	3
X13	7420		• Logic, TI/Equiv.	1
X4	7430		• Logic, TI/Equiv.	1
X9, 11, 16 & 20	7473		• Logic, TI/Equiv.	4
X6-8, 14, 17-19	7490		• Logic, TI/Equiv.	7
X2, 3 & 15	7492		• Logic, TI/Equiv.	3
X12	74121		• Logic, TI/Equiv.	1
Q1	2N3646		• Transistor, NATIONAL/ Equiv.	1
	8008-1G3		• Crystal Holder, AUGAT/Equiv.	1
		1-09-312	• • Insulator, Crystal	1
		3-76-063-21	• • 2.16 MHz Crystal, KW/Equiv.	1
CR1-14	1N270		• Diode, SOLID STATE/ Equiv.	14
TP1-6	SKT103-PC-0		• Test Point, TI/Equiv.	6

9-14 5 Volt Regulator Assy.

Dwg/Ref Symbol	Part No.	IFR Stock No.	Description	Qty Per Assy.
2-09-729		1-09-731	5 V Regulator Assy.	REF
X1152	LM305		• Voltage Regulator, NATIONAL/Equiv.	1
X1151	P1C-600		• Voltage Regulator, UNITRIDE/Equiv.	1
CR1151 & 1152	1N4148		• Diode	2
Q1151	2N2222		• Transistor, MOTOROLA/ Equiv.	1
R1158	62-1-1-501		• Round Trim Pot, SPECTROL/Equiv. (Eff: S/N 1636 and on)	1
	62-1-1-102		• Round Trim Pot, SPECTROL/Equiv. (Eff: to S/N 1636)	1
L1153		2-09-732-1	• Wound 30-Turn Coil Assy	1
L1151		2-09-733-1	• 3½ Turn Coil Assy.	1
L1152		2-09-733-2	• 4 Turn Coil Assy.	1
J1151	205734-1		• 9 Pin Connector, AMP/ Equiv.	1

9-15-1 Prescaler (Eff: to S/N 2215, S/N 2218-2271)

Dwg/Ref Symbol	Part No.	IFR Stock No.	Description	Qty Per Assy.
3-09-545			Schematic	REF
		1-09-598	Prescaler Assy.	1
PC-10		1-09-599	• Prescaler Board Assy.	1
		1-09-477	• • Prescaler PC Board	1
X4-X6	MC1027L		• • Logic, MOTOROLA/ Equiv.	3
X2 & X3	MC1666L		• • Logic, MOTOROLA/ Equiv.	2
X1	MC1692L		• • Op Amp, MOTOROLA/ Equiv.	1
X7	7490		• • Logic, TI/Equiv.	1
X8	72741L		• • Op Amp, TI/Equiv.	1
Q8	2N3646		• • Transistor, NATIONAL/Equiv.	1
Q5-7	2N3905		• • Transistor, NATIONAL/Equiv.	3
Q1-4	66382		• • Transistor, RCA/ Equiv. (Interchangeable with 2N5179)	4
CR2, 5 & 6	1N4148		• • Diode, SOLID STATE/ Equiv.	3
CR4	1N5231		• • Diode, DICKSON/Equiv.	1
CR3	1N5234		• • Diode, DICKSON/Equiv.	1
CR1 & 7	MA47047		• • Diode, MICROWAVE ASSOCIATES/Equiv.	2
C14-18	FA5C-102W		• • 100 pf Feed Thru Capacitor, ALLEN-BRADLEY/Equiv.	5

9-15-1 Prescaler (cont.)

Dwg/Ref Symbol	Part No.	IFR Stock No.	Description	Qty Per Assy.
C13 & 28	FA5C470W		• • 47 pf Feed Thru Capacitor, ALLEN-BRADLEY/Equiv.	2
J1001		1-76-052-1	• Connector, Modified; AMERICON/Equiv.	1
J1002		1-76-052-2	• Connector, Modified; AMERICON/Equiv.	1
P1003	25204-1		• Plug, 9-Pin; AMP/Equiv.	1

9-15-2 Prescaler (Eff: S/N 2215-2217, 2272 and on)

Dwg/Ref Symbol	Part No.	IFR Stock No.	Description	Qty. Per Assy.
3-09-743			Schematic	REF
		1-09-766	Prescaler Assy.	1
1-09-750		1-09-750	· Prescaler Bd. Assy.	1
		2-09-744	· · Prescaler PC Bd.	1
X1	MC12013L		· · Logic, MOTOROLA/ Equiv.	1
X2 & 3	74S112		· · Logic, TI/Equiv.	2
X4	7400		· · Logic, TI/Equiv.	1
Q1 & 2	MRF911		· · Transistor, MOTOROLA/Equiv.	2
CR1-6	MA47047		· · Diode, MICROWAVE ASSOCIATES/Equiv.	6
R13	62-1-1-201		· · 200Ω Trimpot, SPECTROL/Equiv.	1
C12,13 & 14	FA5C-102W		· · 1000pf Feed Thru Capacitor, ALLEN-BRADLEY/Equiv.	3
C15	FA5C-470W		· · 47pf Feed Thru Capacitor, ALLEN-BRADLEY/Equiv.	1
P1003	205204-1		· Plug, 9-Pin, AMP/ Equiv.	1
J1001 & 2	60-0911-092		· Connector, AEP/ Equiv.	2

9-16AP Oscillator Assy.

Dwg/Ref Symbol	Part No.	IFR Stock No.	Description	Qty. Per Assy.
3-09-698		1-09-698	Oscillator Assembly	REF
3-09-666			Oscillator Schematic	REF
FL15	51-713-002		. Filter, Feed Thru, SPECTRUM CONTROL/ Equiv.	1
FL1-14	51-713-001		. Filter, RF Feed Thru, SPECTRUM CONTROL/ Equiv.	14
J702	17-014-000		. Connector, RF, AEP/ Equiv.	1
P701	205206-1		. Connector, 15 pin plug, AMP/Equiv.	1
		1-09-699	. Oscillator PC Board Assy.	1
X701	µA741C		. . Op Amp, SIGNETICS/ Equiv.	1
Q706-10	2N3905		. . Transistor, NATIONAL/ Equiv.	5
Q701, 2, 4 & 5	66382		. . Transistor, RCA/ Equiv.	4
Q703	2N3251A		. . Transistor, NATIONAL/ Equiv.	1
CR712	1N823		. . Diode, MOTOROLA/ Equiv.	1
CR701, 4, 6 & 7	1N4148		. . Diode, SOLID STATE/ Equiv.	6
CR705	1N5231		. . Diode, MOTOROLA/Equiv.	1
CR711	PC0600D		. . Diode, PARAMETRICS/ Equiv. (Eff: to S/N378)	1
CR711	PC0600D SPECIAL		. . Diode, SPECIAL PARAMETRICS/equiv. (Eff: S/N378 & on)	1

9-16AP Oscillator Assy. (cont.)

Dwg/Ref Symbol	Part No.	IFR Stock No.	Description	Qty. Per Assy.
CR8-10, 13, & 15	MA47047		· · Diode, MICROWAVE ASSOCIATES/Equiv.	5
R754	TM½		· · Sensistor, TI/Equiv.	1
L715		1-09-626	· · Coil Assy, 25 turn (EFF: S/N 151 and on)	1
L703	SK-425-1		· · Coil, Natural, PAUL SMITH/Equiv.	1
L704	SK-425-2		· · Coil, Violet, PAUL SMITH/Equiv.	1
L711-14	SK-426-2		· · Coil, Orange, PAUL SMITH/Equiv.	4
L710	SK-426-3		· · Coil, Yellow, PAUL SMITH/Equiv.	1
L705	SK-426-4		· · Coil, Black, PAUL SMITH/Equiv.	1
L706	SK-426-5		· · Coil, Light Violet, PAUL SMITH/Equiv. (Note: Coil does not have violet wires)	1
	1-380598-1		Receptical, Crystal Pin, AMP/Equiv.	10
Y701	3-76-0063-75		· · Crystal, 109.8666 MHz, K.W./Equiv.	1
Y702	3-76-0063-17		· · Crystal, 126.9 MHz, K.W./Equiv.	1
Y703	3-76-0063-15		· · Crystal, 75 MHz, K.W./Equiv.	1
Y704	3-76-0063-13		· · Crystal, 75 MHz, K.W./Equiv.	1
Y705	3-76-0063-67		· · Crystal, 112.8 MHz, K.W./Equiv. (EFF: to S/N 140)	1
	3-76-0063-14		· · Crystal, 108.00 MHz, K.W./Equiv. (EFF: S/N 140 and on)	1

9-16AP Oscillator Assy. (cont.)

Dwg/Ref Symbol	Part No.	IFR Stock No.	Description	Qty. Per Assy.
R746	62-1-1-202		· · 2K Pot, SPECTROL/ Equiv.	1
R745	62-1-1-502		· · 5K Pot, SPECTROL/ Equiv.	1
		3-09-638	· Auxiliary Crystal Oscillator PC Board	1
Q711-15	2N3251A		· · Transistor, NATIONAL/ Equiv.	5
CR714 & 15	MA47047		· · Diode, MICROWAVE ASSOCIATES/Equiv.	2
Y706	3-76-0063-68		· · Crystal, 115.6 MHz, K.W./Equiv. (EFF: to S/N 140)	1
	3-76-0063-67		· · Crystal, 112.8 MHz ±0.001%. K.W./Equiv. (EFF: S/N 140 and on)	1
Y707	3-76-0063-16		· · Crystal, 111.567 MHz ±0.002%, K.W./Equiv.	1
	1-380598-1		· · Receptical, Crystal Pin, AMP/Equiv.	4
		1-09-656	· Phase Lock Range Extender Accessory Board Assy.	1
X702	RC4558		· · Op Amp, TI/Equiv.	1
R756	62-2-1-203		· · 20K Pot, SPECTROL/ Equiv.	1

9-17 Phase-Lock Range Extender (Optional on NAV-401L)

Dwg/Ref Symbol	Parts No.	IFR Stock No.	Description	Qty. Per Assy
		1-09-579	Phase-Lock Range Extender Assembly	REF
3-09-666			Oscillator Schematic	REF
X2	72558P		• Dual Op Amp, TI/ Equiv.	1
R56	62-2-1-203		• 20 K Trimpot, SPECTROL/Equiv.	1
			The following items are installed on the Front Panel:	
	RV6NAYSD-253A	1-76-0003	• 25 K Trimpot, CLAROSTAT/Equiv.	1
		1-76-0132	• Dual 10 K, 10 Turn Trimpot Assy.	1

9-18 Buffer Amp Assy.

Dwg/Ref Symbol	Part No.	IFR Stock No.	Description	Qty Per Assy
2-09-703		1-09-703	Buffer Amp Assy.	REF
2-09-667			Buffer Amp Schematic	REF
	FA5C-102W		• 1000 pf Feedthrough Cap, ALLEN-BRADLEY/ Equiv.	1
J1-J3	50-045-0000		• SMC Male Connector, SEALECTRO/Equiv.	3
PC-15		1-09-637	• Buffer Amp PC Board Assy.	1
Q1-3	66382		• • Transistor, RCA/ Equiv.	3
L1 & 2	1025-52		• • 22 µh Choke, DELEVAN/Equiv.	2

9-19 Phase-Lock Power Monitor Assy.

Dwg/Ref Symbol	Part No.	IFR Stock No.	Description	Qty Per Assy
3-09-604		1-09-604	Phase-Lock Power Monitor Assy.	REF
3-09-438			Phase-Lock Power Monitor Schematic	REF
Q54	2N4223		• Transistor, NATIONAL/Equiv.	1
Q52 & 53	2N3646		• Transistor, NATIONAL/Equiv.	2
Q51	2N3905		• Transistor, NATIONAL/Equiv.	1
Q55	2N5462		• Transistor, MOTOROLA/Equiv.	1
X1	72741L		• Op Amp, TI/Equiv.	1
R5	62-1-1-102		• 1 K Trimpot, SPECTROL/Equiv.	1
CR1	MS7440		• Diode, SOLITRON/Equiv.	1
CR2	5082-2800		• Diode, HEWLETT-PACKARD/Equiv.	1
P901	205736-2		• 15 Pin Receptacale, AMP/Equiv.	1
P902	64-9907-003		• Connector, AEP/Equiv.	1

9-20AP Attenuator/Transmitter Assy.

Dwg/Ref Symbol	Part No.	IFR Stock No.	Description	Qty. Per Assy.
3-09-728		1-09-728	Attenuator/Transmitter Assembly	REF
3-09-550			Modulator, PA & Attenuator Schematic	REF
AT1		1-09-497	· Attenuator Assy.	1
	RG-188A/U		· · Coax Cable, BELDEN/ Equiv.	As Reqd.
CR815	5082-2800		· · Diode, HEWLETT-PACKARD/Equiv.	1
	STFM-2C4		· · Terminal, SEALECTRO/ Equiv.	3
K801		1-76-028	· · Relay, ELECTRONIC SPECIALTIES/Equiv.	1
CR816	1N4148		· · Diode, SOLID STATE/ Equiv.	1
CR814	MA47047		· · Diode, MICROWAVE ASSOCIATES/Equiv.	1
L820		1-09-527	· · 10 Turn Coil	1
		1-09-492	· · Back Plate Assembly	1
		1-09-597	· · Tripler PC Board Assy.	1
		1-09-518	· · Tripler PC Board	1
L817 & 18		1-09-530	· · Tripler Coil	2
Q810 - 12	2N5179		· · Transistor, RCA/ Equiv. (EFF: S/N 140 and on)	3
	66382		· · Transistor (EFF: to S/N 140)	
C809 & 10	NVC-9GW		· · Variable Capacitor JFD/Equiv.	2

9-20AP Attenuator/Transmitter Assy. (cont.)

Dwg/Ref Symbol	Part No.	IFR Stock No.	Description	Qty. Per Assy.
	27-9		· · Connector, AMPHENOL/ Equiv.	2
3-09-585		1-09-585	· · Transmitter PC Board Assy.	1
Q813-16	66382		· · Transistor, RCA/ Equiv. (EFF: to S/N 140)	4
	2N5179		· · Transistor, RCA/ Equiv. (EFF: S/N 140 and on)	
Q817	2N3251A		· · Transistor, NATIONAL/ Equiv. (EFF: 132 and on)	1
	2N5366		· · Transistor, (EFF: to S/N 132)	
CR817	1N4148		· Diode, SOLID STATE/ Equiv.	1
L819		1-09-528	· · Coil, Tank, 5 and 7 turn	1
C818		1-09-702	· · Capacitor, Variable, 2.7-19 pf	1
	2502061		· · Connector, AMP/ Equiv.	1
	250891		· · Solder Pin, Male, AMP/Equiv.	3
3-09-596		1-09-596	· Modulator PC Board Assy.	1
X801 & 2	72741L		· · Op Amp, TI/Equiv.	2
Q805-9	2N4223		· · Transistor, NATIONAL/ Equiv.	5
Q803 & 4	2N3415		· · Transistor, (EFF: to S/N 131)	2
	2N2222		· · Transistor, SOLID STATE/Equiv. (EFF: S/N 131 and on)	

9-20AP Attenuator/Transmitter Assy. (cont.)

Dwg/Ref Symbol	Part No.	IFR Stock No.	Description	Qty. Per Assy.
Q801 & 2	2N5366		Transistor, (EFF: to S/N 131)	2
	2N5231A		Transistor, SOLID STATE/Equiv, (EFF: S/N 131 and on)	
CR801-13	1N4148		Diode, SOLID STATE/ Equiv.	13
R810	62-2-1-503		50K Pot, SPECTROL/ Equiv.	1
		1-09-170	Adapter, Flex Shaft	1
		1-09-171	Adapter, Flex Shaft	1
		1-09-235	Flexible Shaft	1
		1-09-647	Top Cov	1

9-21-1AP Dual Localizer Assy.

Dwg/Ref Symbol	Part No.	IFR Stock No.	Description	Qty. Per Assy.
		1-09-654	Dual Localizer Transmitter Assy.	REF
3-09-658			Dual Localizer Transmitter Schematic	REF
		1-09-655	· Dual Localizer Transmitter PC Board Assy.	2
J1601	27-9		· Connector, AMPHENOL/ Equiv.	1
CR1613,26 & 27	FA5C-120W		· 1000 pf Feed Thru Capacitor, ALLEN BRADLEY/ Equiv.	3
Y1601	3-76-0063-15		· Crystal, 108.1 MHz ±0.002%, K.W./Equiv.	1
Y1602	3-76-0063-64		· Crystal, 110.5 MHz ±0.002%, K.W./Equiv.	1

9-21-2AP Dual Localizer Transmitter Board

Dwg/Ref Symbol	Part No.	IFR Stock No.	Description	Qty. Per Assy.
		1-09-655	Dual Localizer Transmitter Board Assy.	REF
3-09-658			Dual Localizer Transmitter Schematic	REF
X1601 & 2	SN72741L		· Logic, TI/Equiv.	1
	1-380737-0		· Receptical, XTAL Lead, AMP/Equiv.	2
L1601,4,5 & 8	SK426-2		· Coil, orange, PAUL SMITH/Equiv.	2
Q1604 & 8	2N2222		· Transistor, Metal, MOTOROLA/Equiv.	1
Q1602,3,6 & 7	66382		· Transistor, RCA/Equiv.	2
Q1601 & 5	2N3905		· Transistor, NATIONAL/ Equiv.	1
CR1603 & 5	5082-2800		· Diode, H.P./Equiv.	1
CR1,2,4 & 6	1N4148		· Diode, SOLID STATE/ Equiv.	2
C1601,7,8, 11,14,20,21, & 24	C1005C182-K5RMH		· Capacitor, Chip, 1800pf, KEMET/Equiv.	4

9-22 Diode Protect Block Assy.

Dwg/Ref Symbol	Part No.	IFR Stock No.	Description	Qty. Per Assy.
2-09-586		1-09-586	Diode Protect Block Assy.	REF
3-09-548			Localizer/Transmitter Schematic	REF
J4	2052-2		· Connector, AMERICON/ Equiv.	1
J3	UG-1094/U		· Connector, AMPHENOL/ Equiv.	1
J5	27-9		· Connector, AMPHENOL/ Equiv.	1
CR1-4	1N4148		· Diode, SOLID STATE/ Equiv.	4

9-23 and Dwg/Ref Symbol | Part No. | IFR Stock No. | Description | Qty Per Assy.

160 MHz Low Pass Filter Assy. (Installed at Mfgr's Option)

Dwg/Ref Symbol	Part No.	IFR Stock No.	Description	Qty Per Assy.
2-09-764		1-09-764	160 MHz Low Pass Filter Assy.	REF
1-09-763			160 MHz Low Pass Filter Schematic	REF
P1 & 2	17-0104-000		• Connector, AEP/Equiv.	2
		1-09-774	• 3 3/4" Flexible Coax Assy.	1
	RG-188/U		• • Flexible Coax	As Reqd.
	17-302-188		• • SMC Female Connector, AEP/ Equiv.	2

9-24 RF Cable Assys.

Dwg/Ref Symbol	Part No.	IFR Stock No.	Description	Qty. Per Assy.
		3-09-540-1	18" Flexible Coax Assy.	1
	64-9907-003		• SMA Male Connector, AEP/Equiv.	1
	17-0302-188		• SMC Female Connector. AEP/Equiv.	1
	RG-188/U		• Flexible Coax, BELDEN/Equiv.	As Reqd.
		3-09-540-2	7½" Flexible Coax Assy.	2
	17-0302-188		• SMC Female Connector, AEP/Equiv.	4
	RG-188/U		• Flexible Coax, BELDEN/ Equiv.	As Reqd.
		3-09-540-3	14" Flexible Coax Assy.	1
	17-0302-188		• SMC Female Connector, AEP/Equiv.	2
	RG-188/U		• Flexible Coax, BELDEN/ Equiv.	As Reqd.
		3-09-540-4	7½" Flexible Coax Assy.	1
	64-9907-003		• SMA Male Connector, AEP/Equiv.	1
	6399		• BNC Male Connector, GREMAR/Equiv	1
	RG-188/U		• Flexible Coax, BELDEN/Equiv.	As Reqd.

9-25AP Case Assy.

Dwg/Ref Symbol	Part No.	IFR Stock No.	Description	Qty. Per Assy.
		1-09-706	Case Assembly	REF
		3-09-109	Lid Assy., ZERO	1
		3-09-110	Case Assembly, ZERO/ Equiv.	1
		1-09-099	Antenna Assembly	1
		2-09-089	· Carrying Handle	1
		1-09-088	· Handle Locking Stud	2
		2-76-002-4	· Washer	4
		1-09-086	· Thumb Screw	2
	586-210		· O-Ring, NATIONAL/ Equiv.	1
		1-76-072	· Grommet, RUSSELL IND./Equiv.	2
		2-09-443	· Decal	1
		1-75-014	· Type Acceptance Tag	1
		1-76-073	· Foot	4
		1-09-683	· Mounting Foot Assy.	1
		1-09-680	· Support Spreader Bar	2
		1-09-681	· Mtg. Base Standoff	4
		1-09-682	· Base Mtg. Foot	2
		1-23-275	· Foot	4
		1-75-003	· Pairing Chart	1
		1-75-022	· Serial Tag	1
		1-08-151	· Plate, Card retainer	1
		1-08-152	· Fastener, Card Retainer Plate	2

9-26AP Auto Pilot Sweep Generator Board

Dwg/Ref Symbol	Part No.	IFR Stock No.	Description	Qty. Per Assy.
3-09-661		1-09-661	Auto Pilot Sweep Generator Board Assy.	REF
3-09-660			Auto Pilot Sweep Generator Board Schematic	REF
X1401	LM709		· Logic, NATIONAL/ Equiv.	1
X1404,10, 11	5558		· Logic, NATIONAL/ Equiv. (EFF: to S/N 126)	3
	MC1458		· Logic, SIGNETICS ONLY (EFF: S/N 126 and on)	
X1406,8 & 9	CD4016AE		· Logic, RCA/Equiv.	3
X1402	CD4025AE		· Logic, RCA/Equiv.	1
X1403	CD4027AE		· Logic, RCA/Equiv.	1
X1405	CD4029AE		· Logic, RCA/Equiv.	1
X1407	CD4049AE		· Logic, RCA/Equiv.	1
RY1401 & 2	W172DIP-3		· Relay, MAGNECRAFT/ Equiv.	2
CR1401-4	1N4148		· Diode, SOLID STATE/ Equiv.	4
Q1401	2N3251A		· Transistor, metal case, NATIONAL/Equiv.	1
SW1401	435166-2		· Switch, 4 position DIP, AMP/Equiv.	1
R1426	62-1-1-202		· 2K Pot, SPECTROL/ Equiv.	1
R1432	62-1-1-203		· 20K Pot, SPECTROL/ Equiv.	1

9-26AP Auto Pilot Sweep Generator Board (cont.)

Dwg/Ref Symbol	Part No.	IFR Stock No.	Description	Qty. Per Assy.
R1404	62-1-1-503		· 50K Pot, SPECTROL/ Equiv. (EFF: to S/N 126)	1
	62-1-1-204		· 200K Pot, SPECTROL/ Equiv. (EFF: S/N 126 and on)	1
J1401	C931602		· IC Socket, TI/Equiv.	1
P1401	609M161		· IC Socket, TI/Equiv.	1

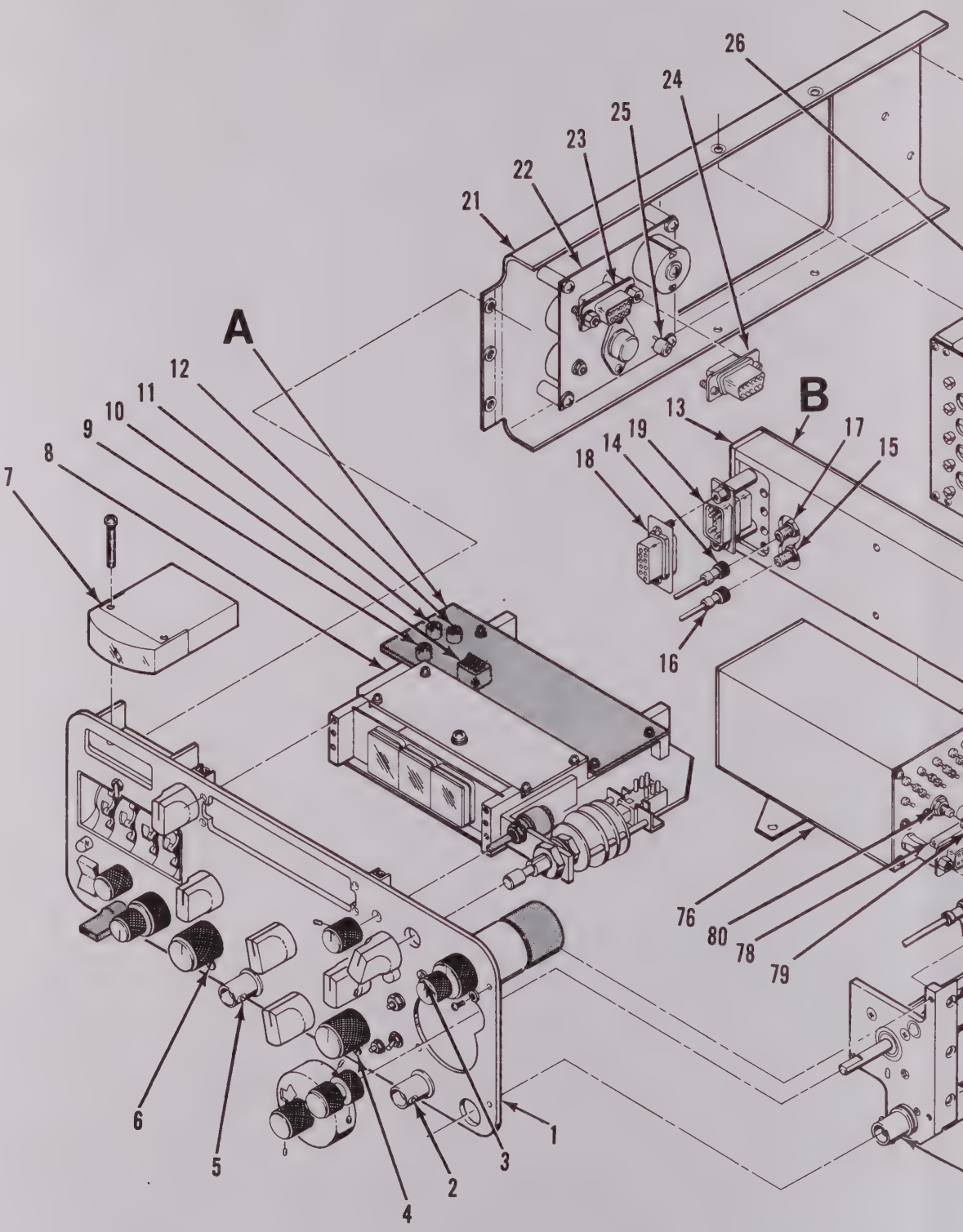

Fig. 10-1AP Mecha

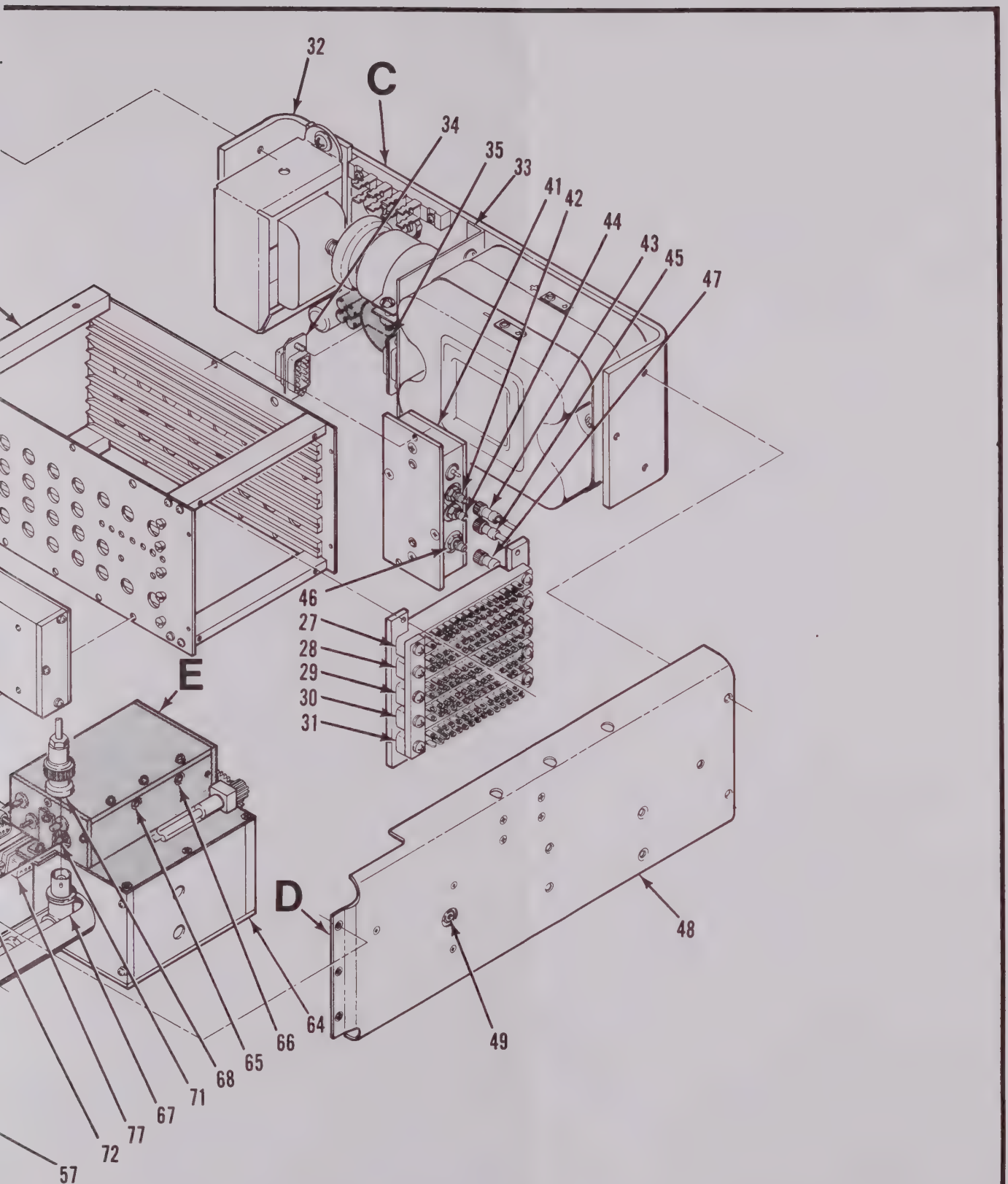

ical Breakdown

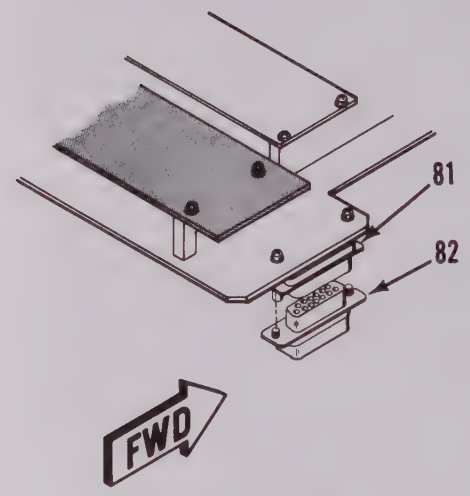

Detail **A**

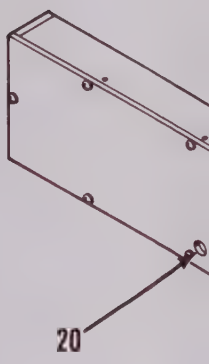

Detai

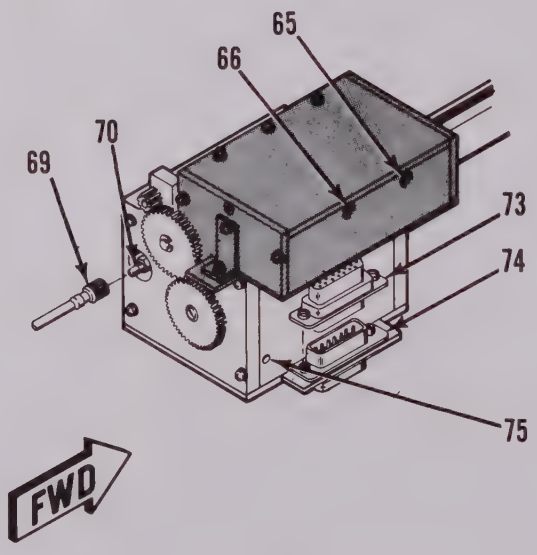

Detail **E**

Fig. 10-1-1AP Mechanic

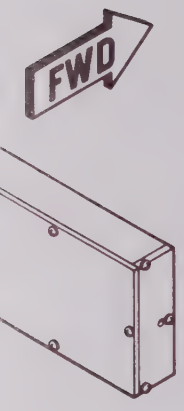

B

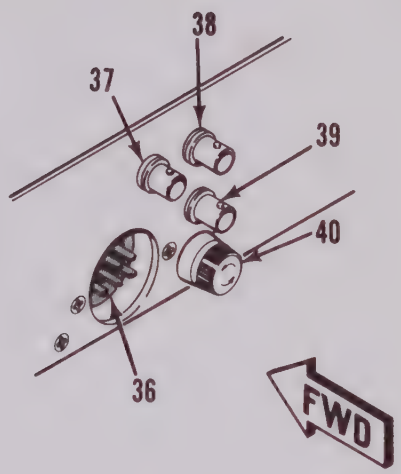

Detail C

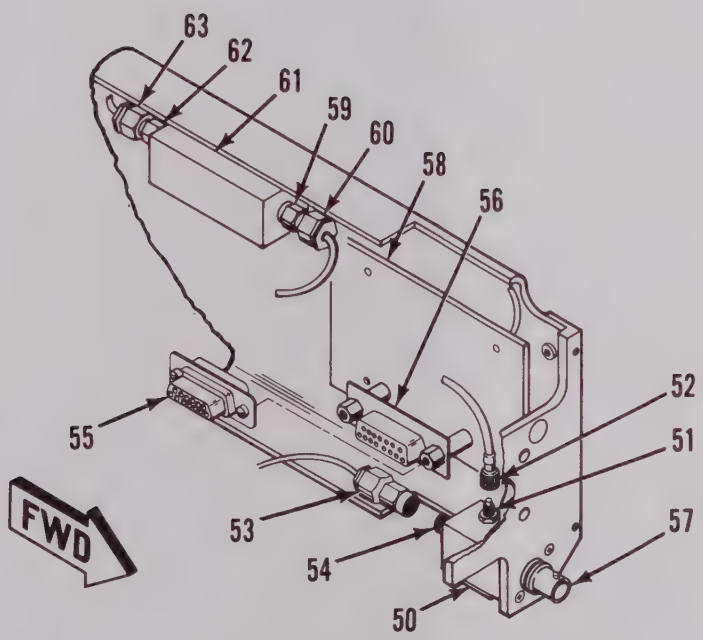

Detail D

. Breakdown Detail Views

Index No.	Description	Circuit Designation
1	Front Panel Assembly	
2	Jack	J2
3	Bearing Zero Adjust.	R8
4	Glide Slope Centering Adjust	R6
5	Jack	J1
6	Localizer Centering Adjust	R4
7	Monitor Meter.	M1
8	Digital Display Assembly W/Auto Pilot Sweep Generator Board Assembly	Assy. 8
9	Sweep Rate Adjust Pot.	R1404
10	Switch	SW401
11	30 μA Adjust pot	R1432
12	Centering Adjust Pot	R426
13	Prescaler Assembly	Assy. 1
14	Plug, Coaxial.	P1001
15	Jack, Coaxial.	J1002
16	Plug, Coaxial.	P1002
17	Jack, Coaxial.	J1001
18	Plug, Multi-Pin Electrical	P1003
19	Jack, Multi-Pin Electrical	J1003
20	Trigger Adjust Pot	R1013
21	Left Side Frame Assembly	
22	5 Volt Regualtor Assembly.	Assy. 3
23	Plug, Multi-Pin Electrical	P1151
24	Jack, Multi-Pin Electrical	J1151
25	5 Volt Trimpot Adjust.	R1158
26	Card Cage Assembly	
27	Card Edge Connector Jack	J101
28	Card Edge Connector Jack	J201
29	Card Edge Connector Jack	J301
30	Card Edge Connector Jack	J401
31	Card Edge Connector Jack	J501
32	Rear Panel Power Supply.	Assy. 2
33	Rectifier Panel Assembly	
34	Jack, Multi-Pin Electrical	J1101
35	Plug, Multi-Pin Electrical	P1101
36	Plug, AC Input	P1104
37	Jack, BNC.	J1102
38	Jack, BNC.	J1103
39	Jack, BNC.	J1104
40	Fuse	F1101

COMPOSITE BREAKDOWN

Index No.	Description	Circuit Designation
41	Buffer Amplifier Assembly	
42	Jack, Coaxial.	J1502
43	Plug, Coaxial.	P1502
44	Jack, Coaxial.	J1503
45	Plug, Coaxial.	P1503
46	Jack, Coaxial.	J1501
47	Plug, Coaxial.	P1501
48	Right Side Frame Assembly	
49	Power Meter Zero Adjust.	R905
50	Diode Protect Block	
51	Jack, Coaxial.	J5
52	Plug, Coaxial.	P5
53	Jack, Coaxial.	J4
54	Plug, Coaxial.	P4
55	Jack, Multi-Pin Electrical	J901
56	Plug, Multi-Pin Electrical	P901
57	Jack, BNC.	J3
58	Phase Lock/Power Monitor Board Assembly.	Assy. 4
59	Plug, Coaxial.	P903
60	Jack, Coaxial.	J903
61	25 dB Pad	
62	Plug, Coaxial.	P902
63	Jack, Coaxial.	J902
64	Transmitter/Attenuator Assembly	
65	Modulation Adjust.	L1203
66	Oscillator Tune Adjust	L1201
67	Jack, BNC.	J804
68	Plug, BNC.	P804
69	Jack, Coaxial.	J802
70	Plug, Coaxial.	P802
71	Jack, Coaxial.	J1201
72	Plug, Coaxial.	P1201
73	Plug, Multi-Pin Electrical	P801
74	Jack, Multi-Pin Electrical	J801
75	Glide Slope Adjust	R810
76	Oscillator Assembly.	Assy. 5
77	Jack, Multi-Pin Electrical	J701
78	Plug, Multi-Pin Electrical	P701
79	Jack, Coaxial.	J702
80	Plug, Coaxial.	P702
81	Jack, Multi-Pin Electrical	J601
82	Plug, Multi-Pin Electrical	P601